WATER MEASUREMENT

MWN WATER METERS

PROPELLER WATER METER WITH HORIZONTAL IMPELLER AXLE

The MWN is propeller, dry water meter Woltman's type, with horizontal impeller axle, parallel to pipe axles. MWN water meters are characterized by modern construction and technology solutions, which make them long-lasting and reliable in cooperation with pulse transmitters and remote system for measuring data readings.

APPLICATION

Water meters are assigned to industrial measurements of water usage up to 30 degrees of cold water and up to 130 degrees of hot water in relatively regular and strong flaw rate. Construction of the water meter gives possibility of mounting on horizontal, vertical and inclined water supply systems with counter set upwards, sidewards or in medium position H-V. Optionally, there is available version of water meter for demineralised water for DN40-150 (cold and hot water) and with the input for pressure sensor (M14x1,5) for DN50-150.

SENSORS.NL

WATER METERS MWN TYPE

WITH RADIO MODULE

WITH PULSE TRANSMITTER

WITHOUT PULSE TRANSMITTER

ADVANTAGES

- Permanent and efficient construction, ensuring the flow of water in low loss of pressure and easiness in assembly in random waterworks installations.
- Lowered weight of water meter.
- Interchangeable and unified metering layer fitting to several sizes of body and assuring optimal water meter management.
- Standard water meter is suitable for remote readings in AMR system.
- The possibility of mounting the water meter in the intermediate position without the influence on the metrological parameters, larger possibilities in designing and modernizing new used water meters connections.
- Very good anticorrosive and mechanical qualities of paint coat (powder paint- epoxy).

CHARACTERISTIC FEATURES

- Resistant to the external magnetic field, according to EN14154-3
- Low starting slow rate
- Wide measuring range
- Ease read-out due to a freely adjustable rotary counter dial placed in the casing
- Possibility of electronic check-up of the metrological parameters of the water meter
- Modular structure
- Removable measuring insert in covered casing
- Magnetic clutch

ACCORDANCE WITH STANDARDS AND RULES OF LAW

- 2004/22/EC directive of the European Parliament and the Council of Europe from the March 31 2004 on measuring instruments
- PN-EN-14154:2005- Water meters. Part 1÷3
- OMIL R49:2004 and 2006- Water meters designed for measuring cold drinking water and hot water
- Research certificate WE type- cold water no. SK08-MI001-SMU002, hot water no. SK10-MI001-SMU013
- MWN water meters have applied Hygienic Attests (PZH) allowing the product to contact with drinking water
- Mechanical classification of environmental conditions - Class M1 - by RMG dated 18.12.2006
- Classification of environmental conditions, climate and mechanical - Class B - PN-EN-14154-3: 2005 + A1,
- Classification of electromagnetic environmental conditions-Class E1 - by RMG dated 18.12.2006

Roller-pointer counter housed, adapted for the radio module, it co-operates with NK and NO transmitters. The counter mechanism is equipped with the element of optical data transition is housed in the plastic airtight casing

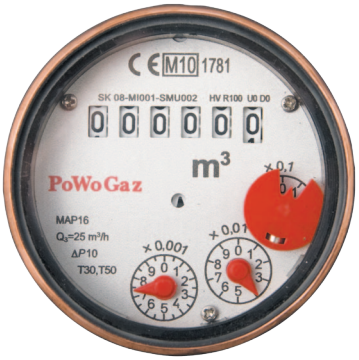

IP68 counter (only for cold water) co-operates with NK transmitter and is placed in the copper cover, in the airtight casing closed with mineral glass

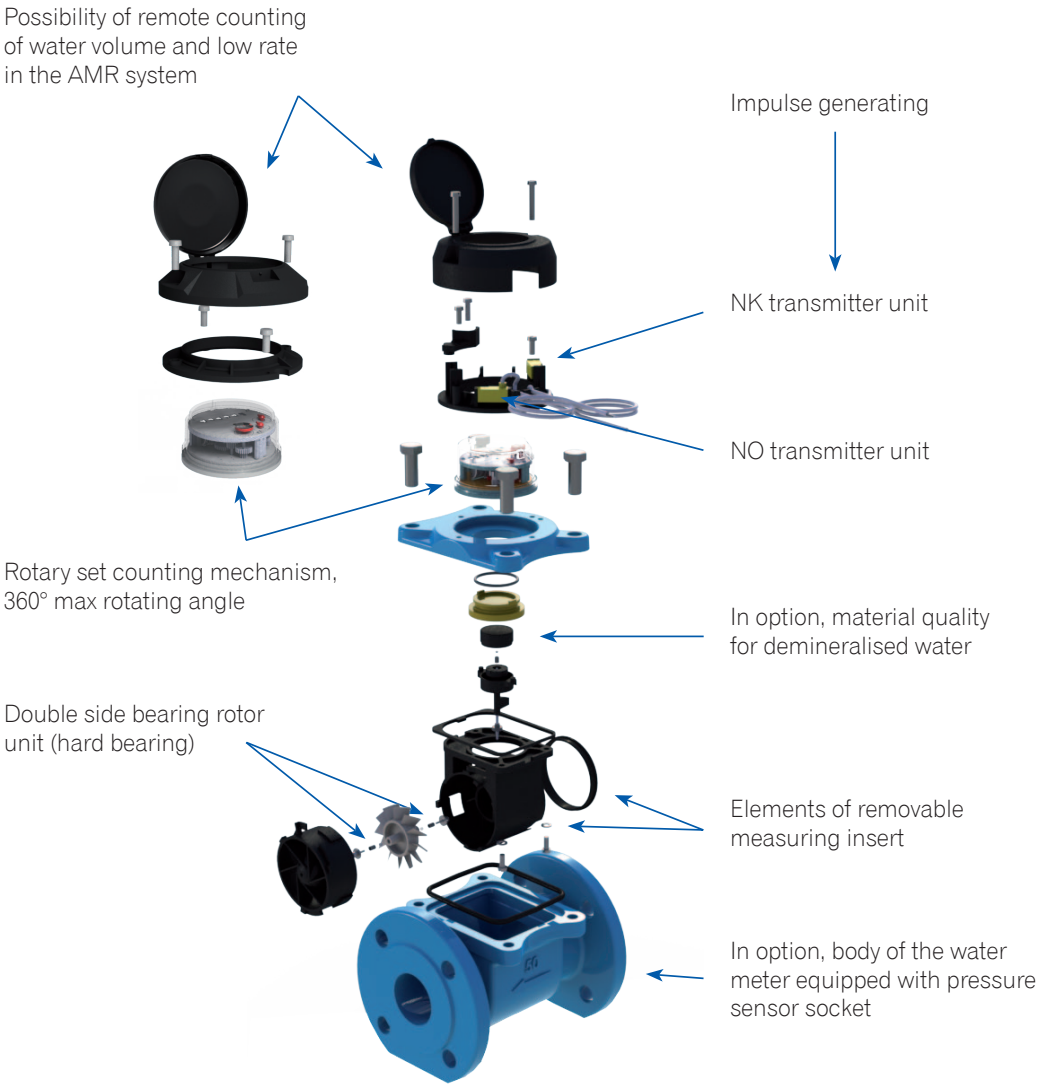

SENSORS.NL

Table 1. TECHNICAL CHARACTERISTICS

Parameter				MWN, MWN-XX										
Nominal diameter		DN	mm	40	50	65	80	100	125	150	200	250	300	
Temperature class (Working temperatures range)		T30 (0,1÷30°C), T50 (0,1÷50°C)		MWN (without transmitter) or MWN (with transmitter) in NK, NO, NKO, NKOP optio										
Constant flow rate		Q_3	m^3/h	25	40	63	100	160	250	400	630	1000	1600	
Overload flow rate		Q_4	m^3/h	31,25	50	78,75	125	200	312,5	500	787,5	1250	2000	
Transitional flow rate		Q_2	m^3/h	0,4	0,64	0,806	1	1,28	2,5	3,2	8,064	16	20,48	25,6
Minimal flow rate		Q_1	m^3/h	0,25	0,4	0,504	0,625	0,8	1,563	2	5,04	10	12,8	16
Starting flow rate		–	m^3/h	0,15	0,15	0,2	0,25	0,25	0,5	1,0	1,5	3	8	
R measuring rate		Q_3/Q_1	–	100	100	125	160	200	160	200	125	100	125	100
Coefficient		Q_2/Q_1	–	1,6										
Temperature class (Working temperatures range)		T130 (0,1÷130°C)		MWN (without transmitter) or MWN (with transmitter) in NK, NKP optio										
Constant flow rate		Q_3	m^3/h	25	25	40	63	100	160	250	400	630	1000	
Overload flow rate		Q_4	m^3/h	31,25	31,25	50	78,75	125	200	312,5	500	787,5	1250	
Transitional flow rate		Q_2	m^3/h	1	1	1,6	2,52	4	6,4	10	16	40,32	64	
Minimal flow rate		Q_1	m^3/h	0,625	0,625	1	1,575	2,5	4	6,25	10	25,2	40	
Starting flow rate		–	m^3/h	0,25	0,25	0,3	0,35	0,6	1,1	2	4	8	15	
R measuring rate		Q_3/Q_1	–	40	40	40	40	40	40	40	40	25	25	
Coefficient		Q_2/Q_1	–	1,6										
Clase de resistencia al perfil de caudal		–	–	U0, D0										
Indication range		–	m^3	10^6						10^7				
Accuracy of indication		–	m^3	0,0005						0,005			0,05	
Upper pressure limit		P_{max}	–	MAP16=(16bar)										
Working pressure range			bar	from 0,3 to 16										
Max pressure lost			kPa	ΔP16=(0,16bar)										
Working position		–	–	H, V										
Border range error allowed		ε	%	±5% ($Q_1 \le Q \le Q_2$) ±2 ($Q_2 \le Q \le Q_4$) for 0,1≤T≤30°C ±3 ($Q_2 \le Q \le Q_4$) for T>30°C										
NK Reed Switch pulse transmitter		–	dm^3/imp.	1000 (standard impulsion) 2,5; 10; 25; 100; 250						10000 (standard impulsion) 25; 100; 250; 1000; 2500;			250; 1000; 2500;	
Optoelectronic impulse transmitter NO**		–	dm^3/imp.	1						10			105,2632	
Dimension		L	mm	200	200	200	225/200***	250	250	300	350	450	500	
		h	mm	65	72	83	95	105	120	135	160	193	230	
		H	mm	177	187	197	219	229	257	357	382	427	497	
		H_1****	mm	227	287	297	239	349	377	582	607	652	722	
		D_z	mm	150	165	185	200	220	250	285	340	400	460	
Weight	without transmitter		kg	7,9	9,9	10,6	13,3/13,8***	15,6	18,1	40,1	51,1	75,1	103,1	
	with transmitter NK | NO			8,3	10,3	11	13,7/14,2***	16	18,5	40,5	51,5	75,5	103,5	

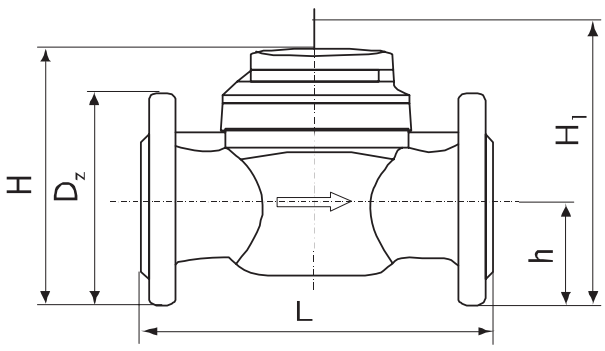

*) Quality: NK- Reed Switch transmitter, NKP- water meter adapted for Reed Switch, NO- optoelectronic transmitter, NKO- optoelectronic and Reed Switch transmitter, KNOP- water mater adapted for optoelectronic and Reed Switch transmitter.
**) Only for T30 and T50.
***) On request.
****) Space for measuring insert removal.

TFlange drilling according to PN-EN 1092-2 (PN10), DIN2532, DIN2501 (NP10), BS4504 (NP10) on special request PN16 and PN25 quality for chosen sizes.

HEAD LOSS DIAGRAM

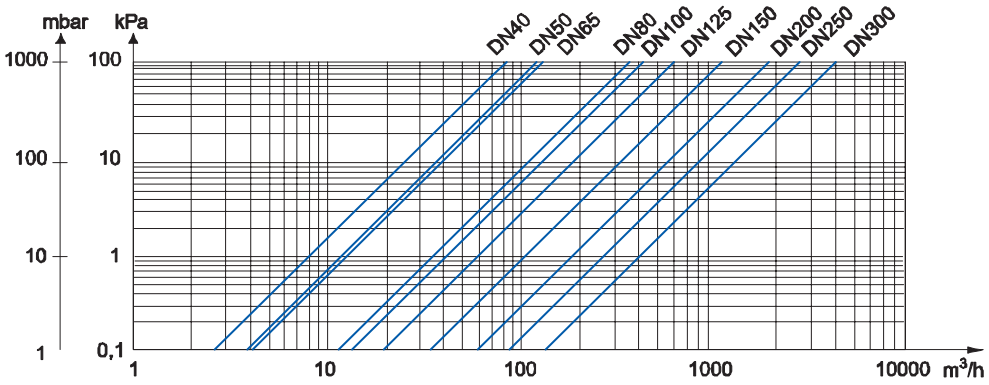

TYPICAL ERROR DIAGRAM

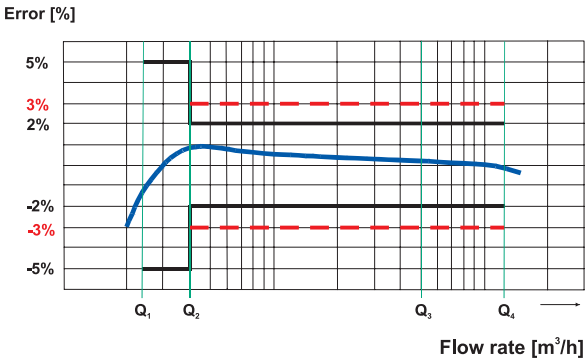

CONNECTION EXAMPLES FOR IMPLEMENTATION REMOTE INDICATION TRANSMITTING AND MEASURING THE FLOW RATE

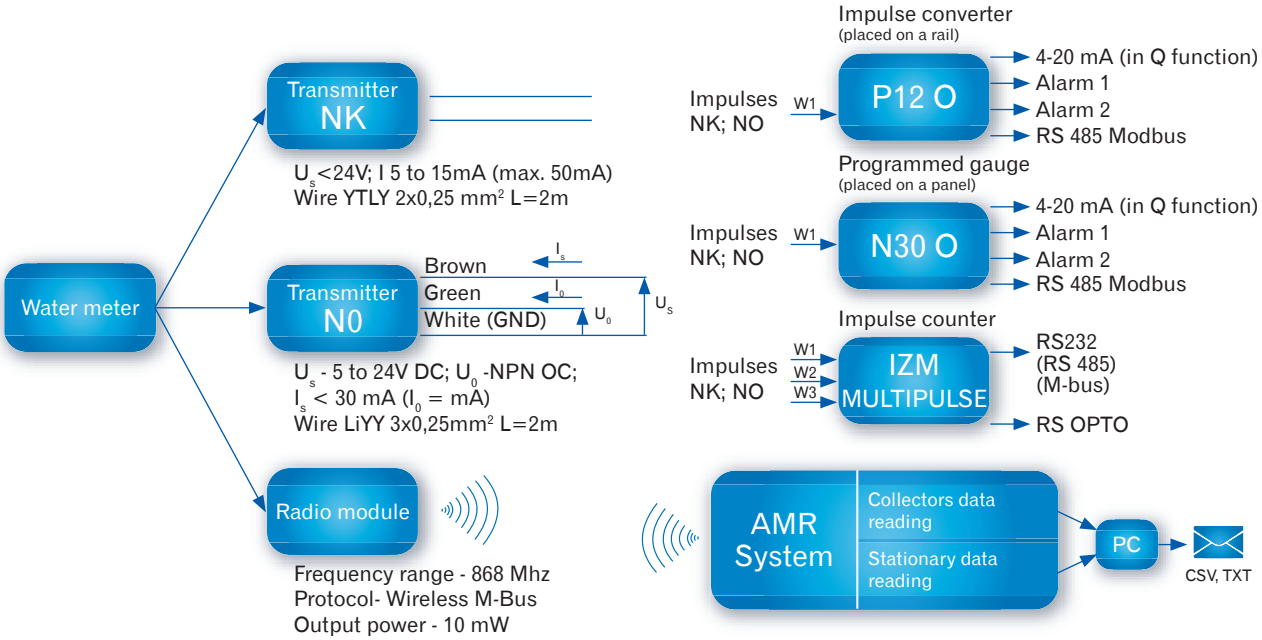

Order example:
Water meter for cold water: ex. MWN 50-NO or MWN 80-NK (1 dm³/imp) etc.
Water meter for hot water: ex. MWN 130-100-NK (25 dm³/imp)

When ordering one should assess other data than the standard ones ex.: impulse value, Quality (ex. for demineralised water) or flange drilling – described earlier.e.

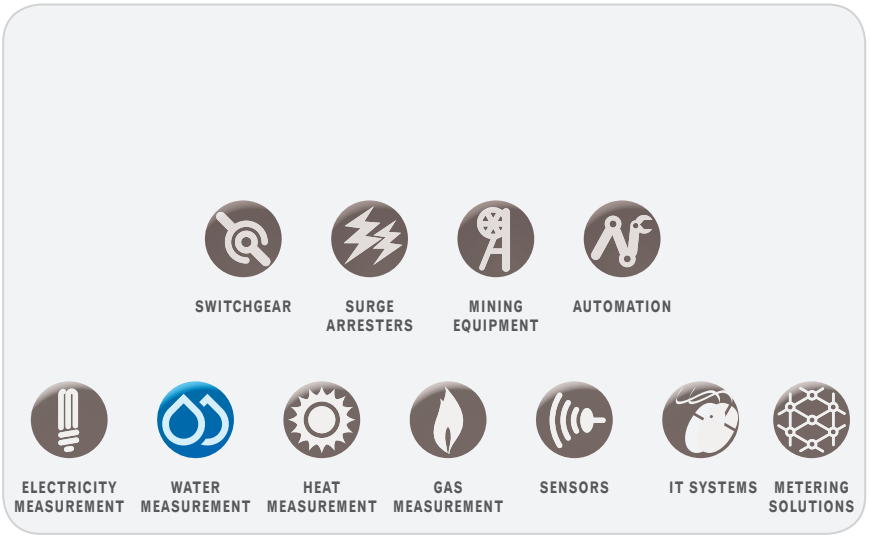
SWITCHGEAR
SURGE ARRESTERS
MINING EQUIPMENT
AUTOMATION
ELECTRICITY MEASUREMENT
WATER MEASUREMENT
HEAT MEASUREMENT
GAS MEASUREMENT
SENSORS
IT SYSTEMS
METERING SOLUTIONS