MECHANICAL PRESSURE MONITORING

- Electronic pressure monitoring
- Temperature monitoring

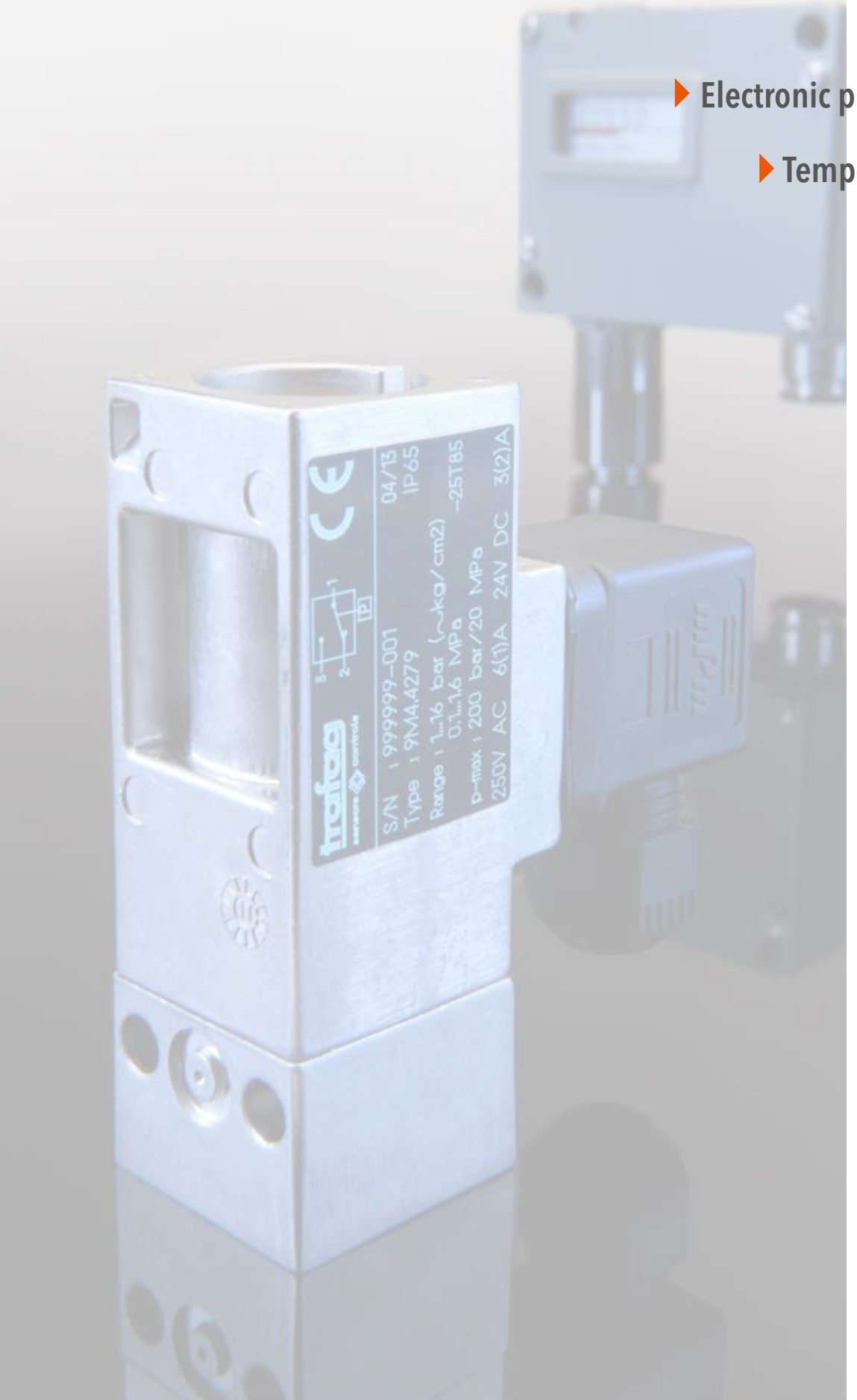

trafag
sensors controls

Table of contents

Mechanical pressure monitoring

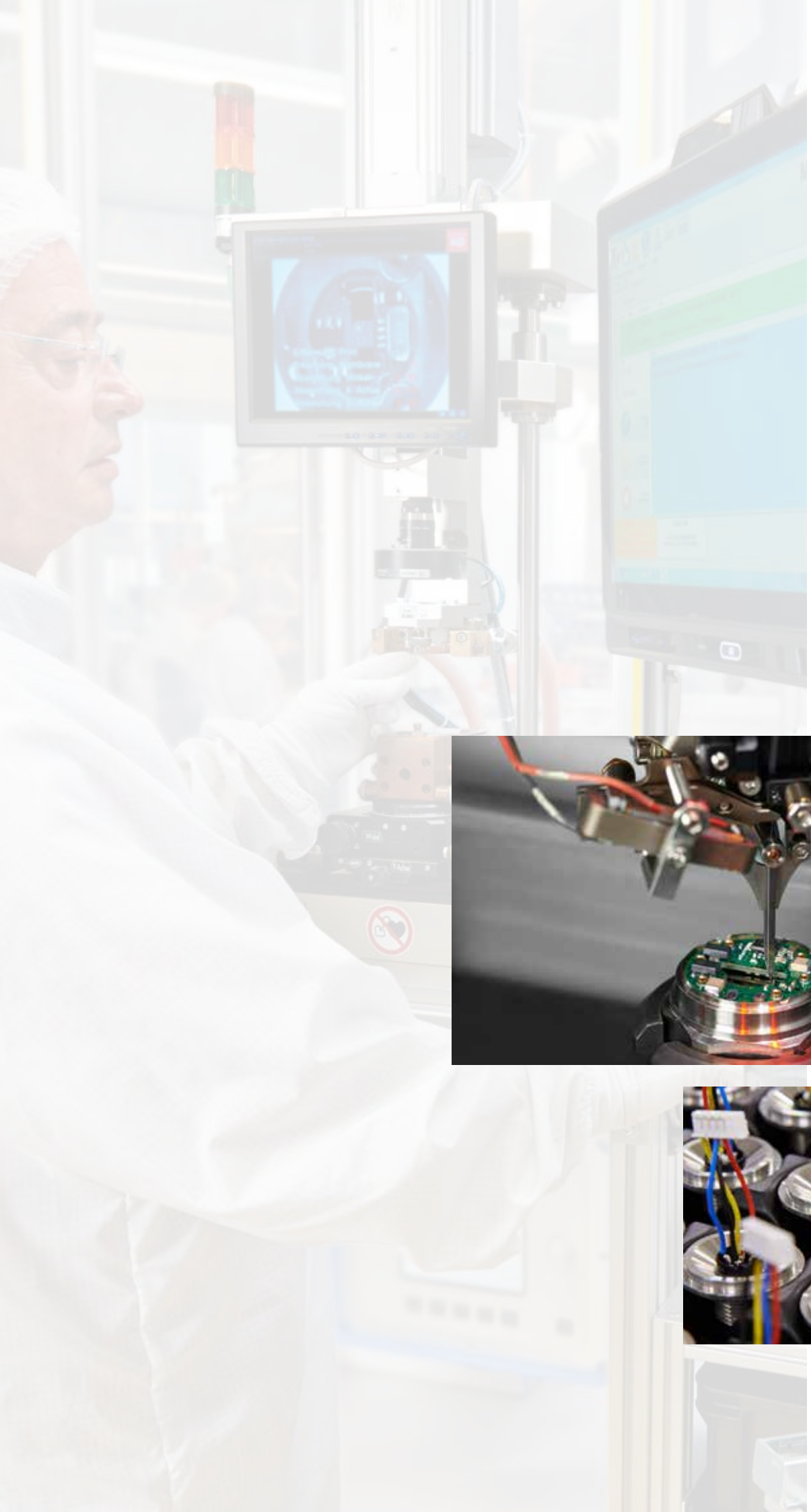

Trafag – the hightech sensor company

Trafag, a Swiss-based company founded in 1942, is supported by a broad sales and service network in over 40 countries across the world. This allows Trafag to offer customers personalised and competent advice and ensures the best possible service. High-performance development and production departments not only guarantee the fast and reliable delivery of our high-quality and high-precision products, but also ensure that customisations can be implemented in a short time.

Competent and customer-oriented

Technological competence, manufacturing expertise and customer-orientation form the three cornerstones of Trafag as a company. Trafag is a completely independent company with headquarters in Bubikon, Switzerland, and further manufacturing companies in Germany and the Czech Republic. A fifth of its employees in Switzerland are involved in the fields of research and development, production technology or applications engineering.

Application and solution-oriented

The direct availability of these resources enables Trafag to be extremely flexible in the areas of development and production as well as in its perception and implementation of customer requirements. Thanks to modular engineering, Trafag is able to efficiently adapt its standard products to the specific needs of customers and to develop special OEM solutions.

Market-oriented and always within reach

Trafag maintains an active presence in over 40 countries. A great number of customers in diverse industrial sectors such as mechanical engineering, hydraulics, engine manufacturing, shipbuilding, railway technology or high-voltage technology appreciate the cooperation offered by our technically competent customer advisory service.

Adaptable and efficient

The ability to develop and manufacture its strategically important components in-house means that Trafag can both mass-produce and manufacture on a small scale at short notice. Rigorous quality management in accordance with ISO 9001, state of the art production facilities under clean room conditions and stringently monitored production processes ensure that Trafag meets the highest quality demands.

Trafag product lines

Mechanical pressure monitoring

Trafag's electromechanical pressure switches provide high vibration resistance and switch point precision in combination with an extremely robust and durable design. This results in switches that can be operated for decades without requiring maintenance, even under harsh conditions. Various designs with bellows, membrane and piston sensors cover a wide variety of pressure ranges, media and load profiles for many different applications. Pressostats are available with Ex- and ship approvals as well as with railway conformity.

Temperature monitoring

For 70 years Trafag thermostats have proven their robustness in order to withstand the most adverse environmental conditions. Industry usage ranges from air conditioning applications to engine and ship manufacturing and even to offshore oil and gas platform production. The appeal of Trafag thermostats lies in their high switching point precision even after decades of operation under harsh conditions without maintenance. Trafag thermostats are available in various sensor and housing versions, with various Ex and ship approvals as well as in railway-compliant versions.

Pressure transmitters

The technically sophisticated pressure transmitters guarantee flawless pressure measurement. They meet the high requirements for long-term stability, vibration resistance, electromagnetic compatibility, shock resistance and temperature insensitivity. As a result, they have proven themselves for decades in a multitude of demanding applications under harsh environmental conditions. Trafag pressure transmitters are available in a wide variety of versions: various pressure and electrical connections, measuring processes, electrical output signals, approvals for explosion protection and shipboard use. Railway-compliant versions are also available.

Electronic pressure switches

The electronic pressure switches from Trafag are based on the million-times proven, in-house developed transmitter sensor technology. The superior technology and precise production guarantee a faultless functioning even where vibration resistance, electromagnetic compatibility, shock resistance or temperature insensitivity are a prerequisite. The robust pressure switches from Trafag monitor the pressure behavior of liquid and gaseous media, e.g. in plant construction and mechanical engineering, hydraulic systems, process engineering, rail vehicles, shipbuilding or in water treatment.

Markets and applications

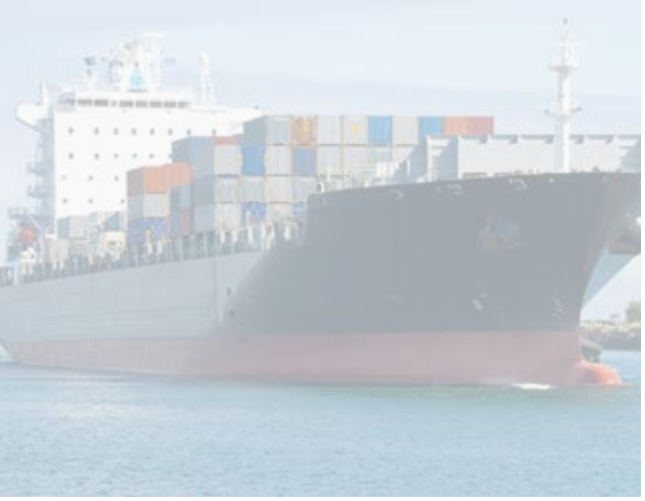

Shipbuilding

- Propulsion
- Pumps
- Ballast water treatment
- Steering
- Separators
- Tank level

Hydraulics

- Construction machinery
- Agricultural machinery
- Injection molding machines
- Community vehicles
- Elevators

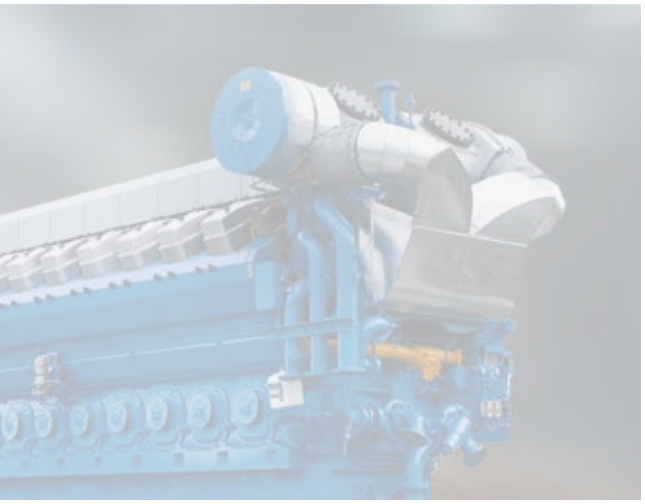

Engines

- Common rail injection
- Cooling water
- Oil pressure
- Fuel pressure
- Turbo charger

Railways

- Brake systems
- Pantograph
- Air compressors
- Control and safety systems
- Air-conditioning systems

Test & measurement

- Engine and transmission test benches
- Mobile vehicle testing
- Testing of hydraulic components
- Material testing
- Brake and chassis test benches

Various

- Water treatment
- Level monitoring
- Machine building industry
- HVAC
- Oil and gas
- Chemical industry, process technology

trafag sensors controls


trafag
sensors & controls
S/N : 999999-001
04/13
Type : 9M4.4279
IP65
Range : 1...16 bar (~kg/cm2)
0.1...1.6 MPa
-25T85
p-max : 200 bar/20 MPa
250V AC 6(1)A 24V DC 3(2)A

Mechanical pressure monitoring

Trafag's electromechanical pressure switches provide high vibration resistance and switch point precision in combination with an extremely robust and durable design. This results in switches that can be operated for decades without requiring maintenance, even under harsh conditions. Various designs with bellows, membrane and piston sensors cover a wide variety of pressure ranges, media and load profiles for many different applications. Pressostats are available with Ex- and ship approvals as well as with railway conformity.

Bellow sensor

- High switching point precision and repeatability
- Stainless steel, bronze and brass designs
- Optionally welded/soldered design for absolute impermeability
- Measure liquid, vaporous and gaseous media

Piston sensor

- Suitable for high pressure ranges
- Not sensitive to pressure surges
- Suitable for applications with many load cycles
- Ideal for hydraulic systems

Membrane sensor

- Resistant to high overpressures and not sensitive to pressure surges
- Suitable for applications with many load cycles
- Measure liquid, vaporous and gaseous media


PEPPERL+FUCHS

Accessories

Trafag offers a wide range of accessories, which can be adapted to meet specific application requirements and also make installation easier. They include diagnostic valve manifolds, adapters, snubbers, pressure peak damping elements, mounting plates and separation barriers for explosion-protection applications. These original accessories are ideally adapted to Trafag's products.

Accessories for pressure measurement instruments

- DVB Diagnostic valve block
- Hand pump with precision manometer
- Switch amplifier
- Adapters with manometer pressure ports
- Snubber
- Mounting plate
- Screwed cable gland

Mechanical pressure monitoring

	PST4B 9B4	PST4K 9K4	PST4M 9M4	PSTD 9D0	P/PS 900/904/912	PV/PVF 903/907/915/940/941/942
	Seite 16	Seite 22	Seite 27	Seite 32	Seite 37	Seite 43
						
Measuring principle	Bellow	Piston	Membrane	Bellow	Bellow	Bellow
Measuring range	-0.6 ... 3.4 to 4 ... 40 bar -8 ... 45 to 60 ... 500 psi	1 ... 10 to 40 ... 400 bar 14 ... 150 to 580 ... 5800 psi	1 ... 10 to 10 ... 100 bar 14 ... 150 to 150 ... 1500 psi	-1 ... 6 and -1 ... 8 bar	-0.9 ... 1.5 to 10 ... 100 bar 5 ... 50 to 125 ... 1500 psi	-0.9 ... 1.5 to 4 ... 40 bar 5 ... 50 to 50 ... 500 psi
Output signal	1 Floating change-over contact (SPDT)	1 Floating change-over contact (SPDT)	1 Floating change-over contact (SPDT)	1 Floating change-over contact (SPDT)	1 Floating change-over contact (SPDT)	1 Floating change-over contact (SPDT)
Pressure connections	G1/8" f, G1/4" f, M10x1.0 f, G1/4" m	G1/8" f, G1/4" f, M10x1.0 f	G1/8" f, G1/4" f, M10x1.0 f	G1/4" f	G1/4" f, G1/2" m, 1/4"NPT f	G1/4" f, G1/2" m, 1/4" NPT f
Electrical connections	EN175301-803-A (DIN43650-A)	EN175301-803-A (DIN43650-A)	EN175301-803-A (DIN43650-A)	EN175301-803-A (DIN43650-A)	Screw terminal	Screw terminal
Switching differential	Not adjustable	Not adjustable	Not adjustable	Not adjustable	Not adjustable	Adjustable
Media temperature	–25°C ... +125°C –40°C ... +125°C	–25°C ... +125°C	0°C ... +80°C	-25°C ... +120°C	-40°C ... +150°C	-40°C ... +150°C
Ambient temperature	–25°C ... +85°C –40°C ... +85°C	-25°C ... +85°C	0°C ... +80°C	-25°C ... +85°C	-25°C ... +70°C	-25°C ... +70°C
Protection	IP65	IP65	IP65	IP65	IP65	IP65
Housing / pressure connection	Aluminium EN AW-6026 AlMgSiPb0.4 anodized	Aluminium EN AW-6026 AlMgSiPb0.4 anodized	Aluminium EN AW-6082 AlMgSi1 anodized	Brass CuZn39Pb3	AlSi10Mg/ Epoxy coated	AlSi10Mg/ Epoxy coated
Sealing	HNBR 75 Sh, FPM, EPDM	PTFE	FKM	-	NBR	NBR
Applications	Shipbuilding Engine manufacturing Railways Machine tools	Shipbuilding Engine manufacturing Railways Machine tools Hydraulics	Shipbuilding Engine manufacturing Railways Machine tools Hydraulics	Shipbuilding Engine manufacturing Machine tools Hydraulics	Shipbuilding Engine manufacturing Railways Machine tools Hydraulics	Shipbuilding Engine manufacturing Railways Machine tools Hydraulics
Approval / conformity	ABS, BV, CCS, DNV-GL, KRS, LR, NKK, RINA, RMRS EN60730-1/ EN60730-2-6: Type 2.B.H	ABS, BV, CCS, DNV-GL, KRS, LRS, RINA, EN60730-1/ EN60730-2-6: Type 2.B.H	ABS, BV, CCS, DNV-GL, KRS, LRS, RINA, EN60730-1/ EN60730-2-6: Type 2.B.H	DNV-GL EN60730-1/ EN60730-2-6: Type 2.B.H	ABS, BV, CCS, DNV-GL, KRS, LRS, RINA EN60730-1/ EN60730-2-6: Type 2.B.H	ABS, BV, CCS, DNV-GL, KRS, LRS, RINA EN60730-1/ EN60730-2-6: Type 2.B.H
Type of protection						
Data sheet	www.trafag.com/H72367	www.trafag.com/H72369	www.trafag.com/H72368	www.trafag.com/H72273	www.trafag.com/H72252	www.trafag.com/H72257
Instructions	www.trafag.com/H73367	www.trafag.com/H73367	www.trafag.com/H73367	www.trafag.com/H73273	www.trafag.com/H71261	www.trafag.com/H71261

	PK 944/947	PD 920/924/932	901/902/905/906	987/988	EXP 900/904/912	EXPK 944/947/953	EXPD 920/924/932
	Seite 49	Seite 55		Seite 61	Seite 66	Seite 71	Seite 77
							
	Piston	Bellow	Membrane	Bellow	Bellow	Piston	Bellow
	1 ... 10 to 60 ... 600 bar	-1 ... 6 to -1 ... 18 bar	30 ... 600 and 50 ... 1000 mbar	-0.3 ... 1.3 to 1 ... 10 bar	-0.9 ... 1.5 to 4 ... 40 bar	1 ... 10 to 60 ... 600 bar	-1 ... 6 to -1 ... 18 bar
	1 Floating change-over contact (SPDT)	1 Floating change-over contact (SPDT)	1 Floating change-over contact (SPDT)	1 or 2 floating change-over contacts (SPDT)	1 Floating change-over contact (SPDT)	1 Floating change-over contact (SPDT)	1 Floating change-over contact (SPDT)
	G1/4" f, G1/2" m	G1/4" f, G1/8" f, G1/2" m	G1/4" f, G1/2" m	G1/4" m	G1/4" f, G1/2" m	G1/4" f, G1/2" m	G1/4" f, G1/8" f, G1/2" m
	Screw terminal	Screw terminal	Screw terminal	Blade connector	Screw terminal	Screw terminal	Screw terminal
	Not adjustable	Not adjustable	Not adjustable	Not adjustable	Not adjustable	Not adjustable	Not adjustable
	NBR: -30°C ... +100°C FKM: -15°C ... +150°C	-40°C ... +150°C	-40°C ... +150°C	-25°C ... +80°C	-40°C ... +150°C	NBR: -30°C ... +100°C FKM: -15°C ... +150°C	-50°C ... +150°C
	-20°C ... +70°C	-25°C ... +70°C	-25°C ... +70°C	-25°C ... +70°C	-50°C ... +65°C	-50°C ... +65°C	-50°C ... +65°C
	IP65	IP65	IP65	IP40 (Microswitch IP67)	IP66 Accessory 06: IP66	IP66 Accessory 06: IP66	IP66
	AlSi10Mg/ Epoxy coated	AlSi10Mg/ Epoxy coated	AlSi10Mg/ Epoxy coated	PBTP, Crastin	AlSi10Mg/ Epoxy coated Accessory 06: 1.4301 (AISI 304)	AlSi10Mg/ Epoxy coated Accessory 06: 1.4301 (AISI 304)	AlSi10Mg/ Epoxy coated
	NBR/FKM	NBR	NBR	-	NBR	NBR / FKM	NBR
	Shipbuilding Engine manufacturing Railways Machine tools Hydraulics	Shipbuilding Engine manufacturing Railways Machine tools Hydraulics	Engine manufacturing HVAC	Machine tools Medium voltage switchgear	Ex II 2G / D	Ex II 2G / D	Ex II 2G / D
	ABS, BV, CCS, DNV-GL, KRS, LRS, RINA EN60730-1/ EN60730-2-6: Type 2.B.H	ABS, BV, CCS, DNV-GL, KRS, LRS, RINA EN60730-1/ EN60730-2-6: Type 2.B.H	EN60730-1/ EN60730-2-6: Typ 2.B.H	EN60730-1/ EN60730-2-6: Type 2.B.H	SEV 15 ATEX 0157 X IECEx SEV 17.0013X	SEV 15 ATEX 0157 X IECEx SEV 17.0013X	SEV 15 ATEX 0157 X IECEx SEV 17.0013X
					Areas with gaz explosion hazards: II 2G Ex db eb IIC T6 Gb Areas with dust explosion hazards: II 2D Ex tb IIIC T80°C Db	Areas with gas explosion hazards: II 2G Ex db eb IIC T6 Gb; Areas with dust explosion hazards: II 2D Ex tb IIIC T80°C Db	Areas with gas explosion hazards: II 2G Ex db eb IIC T6 Gb; Areas with dust explosion hazards: II 2D Ex tb IIIC T80°C Db
	www.trafag.com/H72259	www.trafag.com/H72253	www.trafag.com/H72269	www.trafag.com/H72272	www.trafag.com/H72263	www.trafag.com/H72270	www.trafag.com/H72256
	www.trafag.com/H71261	www.trafag.com/H73256		www.trafag.com/H73272	www.trafag.com/H73171	www.trafag.com/H73171	www.trafag.com/H73171

PICOSTAT PRESSURE SWITCH

Swiss based Trafag is a leading international supplier of high quality sensors and monitoring instruments for measurement of pressure and temperature. The 9B4 of the Picostat series is based on our long lasting experience in the shipbuilding and railway sector. This further improved version offers high vibration resistance within a compact body and is suitable for a wide temperature range.

Applications

- Shipbuilding
- Engine manufacturing
- Railways
- Machine tools

Features

- Improved vibration resistance
- Compact design
- Rugged housing
- Protection IP65
- Any mounting position possible

Technical Data			
Measuring principle	Bellow	Repeatability	± 0.5 % FS typ.
Measuring range	-0.6 ... 3.4 to 4 ... 40 bar -8 ... 45 to 60 ... 500 psi	Media temperature	Standard: –25°C ... +125°C with sensor 789/790/791: –40°C ... +125°C
Output signal	1 Floating change-over contact (SPDT)	Ambient temperature	Standard: –25°C ... +85°C with sensor 789/790/791: –40°C ... +85°C
Switching differential	Not adjustable	Approval / conformity	ABS, BV, CCS, DNV-GL, KRS, LR, NKK, RINA, RMRS EN60730-1/ EN60730-2-6: Typ 2.B.H

Subject to change

Ordering information/type code

		9B4 . XX	XX	XXX	XX	XX
Microswitch	Standard [1]	42				
	Standard [1]	33				
	Gold plated contacts [1]	84				

Range

Range [bar]	Over pressure [bar]		Range [psi]	Over pressure [psi]	
-0.6 ... 3.4	12	74	-8 ... 45	174	G4
0 ... 4	12	76	0 ... 50	174	G6
0 ... 6	12	77	0 ... 100	174	G7
1 ... 10	24	78	14 ... 150	348	G8
1 ... 16	24	79	14 ... 250	348	G9
2 ... 25	40	80	30 ... 400	580	H0
4 ... 40	50	81	60 ... 500	725	H1

Sensor

Sensor material	Sensor housing material	Range	
Bronze bellow (CuSn6) [2]	Aluminium EN AW-6026 AlMgSiPb0.4 anodized	74	769
Bronze bellow (CuSn6) [2]	Aluminium EN AW-6026 AlMgSiPb0.4 anodized	76, 77	770
Bronze bellow (CuSn6) [2]	Aluminium EN AW-6026 AlMgSiPb0.4 anodized	78, 79	771
Bronze bellow (CuSn6) [2]	Aluminium EN AW-6026 AlMgSiPb0.4 anodized	80, 81	772
Bronze bellow (CuSn6) [3] [4]	Brass (CuZn39Pb3)	74	789
Bronze bellow (CuSn6) [3] [4]	Brass (CuZn39Pb3)	76, 77	790
Bronze bellow (CuSn6) [3] [4]	Brass (CuZn39Pb3)	78, 79	791
Bellows stainless steel (1.4404/AISI316L) [4]	Stainless steel	76, 77	753
Bellows stainless steel (1.4404/AISI316L) [4]	Stainless steel	78, 79	754

Pressure connection

G1/8" female	02
G1/4" female	04
M10x1 female [5]	03
G1/4" male [5]	17

Accessories

Flange with O-Ring [4]	11
Female electrical connector EN 175301-803-A (DIN43650-A)	46
Welsh plug G1/4"	74
Fixing set	V3
Covering cap	15
Lead seal (manipulation protection)	16
Seal HNBR, -25°C ... +125°C (standard seal) [6]	83
Seal FPM, -18°C ... +125°C [5]	61
Seal EPDM, -40°C ... +125°C [5]	63
Switch point adjustment on customers request Please indicate when ordering: - Switchpoint including measurement unit (kPa, bar, MPa, psi, abs. or rel.) - Increasing or decreasing	88
Switch point scale	98
Damping elements and snubber see data sheet H72258	

[1] Switching differential not adjustable
[2] Media contacting O-Ring
[3] O-Ring not media contacting
[4] Only with pressure connection 04 (G1/4") others upon request
[5] Upon request
[6] For pressure connection G1/4" male upon request

Standard products (extra short lead time)				
Product No.	**Type Code**	**Pressure range [bar]**	**Over pressure max. [bar]**	**Switching differential [bar]**
PST4B3.44	9B4 4274 769 04 0000 0000 15 46 V3	-0.6 ... 3.4	12	0.2 ± 0.1 (fixed)
PST4B64	9B4 4277 770 04 0000 0000 15 46 V3	0 ... 6	12	0.2 ± 0.1 (fixed)
PST4B164	9B4 4279 771 04 0000 0000 15 46 V3	1 ... 16	24	0.4 ± 0.2 (fixed)
PST4B254	9B4 4280 772 04 0000 0000 15 46 V3	2 ... 25	40	1.0 ± 0.6 (fixed)
PST4B404	9B4 4281 772 04 0000 0000 15 46 V3	4 ... 40	50	1.2 ± 0.8 (fixed)
PST4B3.4F4	9B4 4274 769 04 0000 0000 11 15 46 74 V3	-0.6 ... 3.4	12	0.2 ± 0.1 (fixed)
PST4B6F4	9B4 4277 770 04 0000 0000 11 15 46 74 V3	0 ... 6	12	0.2 ± 0.1 (fixed)
PST4B16F4	9B4 4279 771 04 0000 0000 11 15 46 74 V3	1 ... 16	24	0.4 ± 0.2 (fixed)
PST4B25F4	9B4 4280 772 04 0000 0000 11 15 46 74 V3	2 ... 25	40	1.0 ± 0.6 (fixed)
PST4B40F4	9B4 4281 772 04 0000 0000 11 15 46 74 V3	4 ... 40	50	1.2 ± 0.8 (fixed)
PST4B6S4	9B4 4277 753 04 0000 0000 15 46 V3	0 ... 6	12	0.2 ± 0.1 (fixed)
PST4B16S4	9B4 4279 754 04 0000 0000 15 46 V3	1 ... 16	24	0.4 ± 0.2 (fixed)

Specifications		
Accuracy	Repeatability	± 0.5 % FS typ.
	Switching differential	See table
	Adjustment range switchpoint [2]	10 % ... 90 % FS
	Temperature dependence switching point	–25°C ... +125°C: ca. –0.1% FS/°C typ. < –25°C: ca. –0.25% FS/°C typ.
Environmental conditions	Ambient temperature	Standard: –25°C ... +85°C with sensor 789/790/791: –40°C ... +85°C
	Media temperature	Standard: –25°C ... +125°C with sensor 789/790/791: –40°C ... +125°C
	Storage temperature	Standard: –30°C ... +125°C with sensor 789/790/791: –45°C ... +125°C
	Protection [1]	IP65
	Humidity	Max. 95 % relative
	Vibration	Switch: IEC/EN 60068-2-6 10...59 Hz: ±0.75 mm Ampl. 59...500 Hz: 5 g
	Shock	50 g / 3 ms
Mechanical Data	Sensor	See ordering information
	Housing	Aluminium EN AW-6026 AlMgSiPb0.4 anodized
	Sealing	HNBR 75 Sh, FPM, EPDM
	Housing seal	EPDM 75 Sh
	Male electrical plug	Polyamide (PA)
	Mounting torque	G 1/4": M_A= 32 ... 40 Nm
	Installation	any position
	Weight	~ 160 g
Microswitch	Rating	See table
	Resistance of insulation	500 VDC > 10 MΩ
	Dielectric strength	>1.5 kV AC/60 s terminal ground >500 VAC/60 s via open contacts
Electrical connection	Electrical connections	EN175301-803-A (DIN43650-A)
	Female electrical connector	Cable-Ø: 4 ... 9 mm Terminal screw: 4 x 0.5...1.5 mm²

[1] Provided female connector is mounted according to instructions
[2] Other adjustment ranges upon request

Dimensions

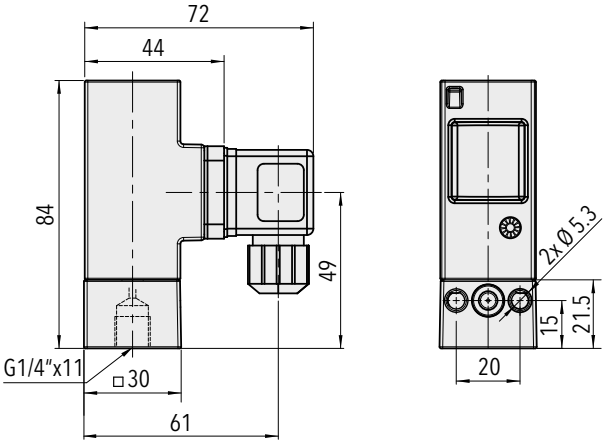

9B4.XXXX.7XX.**04**.46.V3

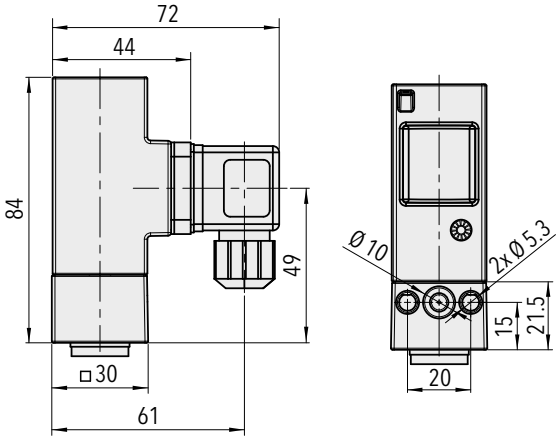

9B4.XXXX.7XX.04.**11**.46.74.V3

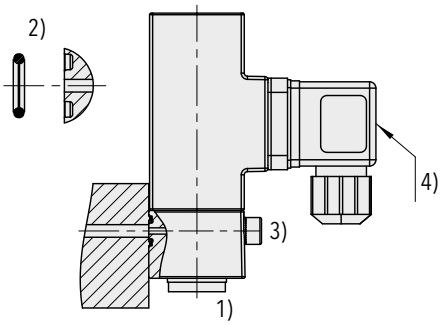

9B4.XXXX.XXX.XX.**11**

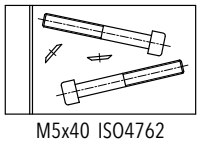

9B4.XXXX.XXX.XX.**V3**

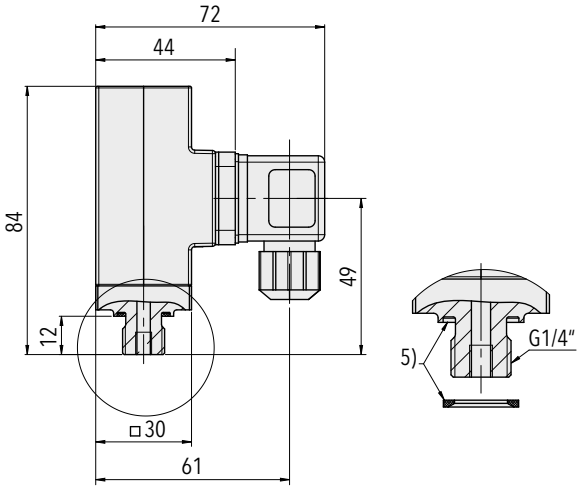

9B4.XXXX.7XX.**17**.XX

1) Torque: G 1/4": M_A = 32 ... 40 Nm
2) O-Ring: ø 6.75x1.78 NBR 90 Sh
3) Fixing screw: M5; property class: 8.8; torque: 4.5 ... 6 Nm
4) Torque connector center screw: max. 0.4 Nm
5) Seal: see accessories

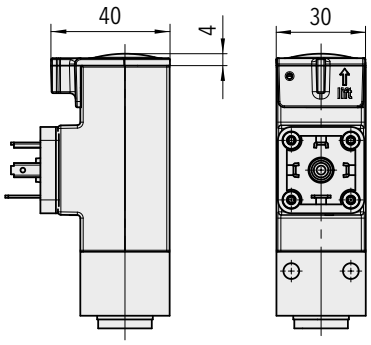

9B4.XXXX.XXX.XX.**15**

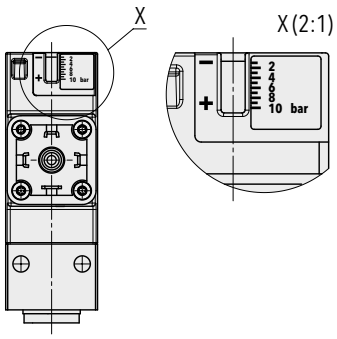

9B4.XXXX.XXX.XX.**98**

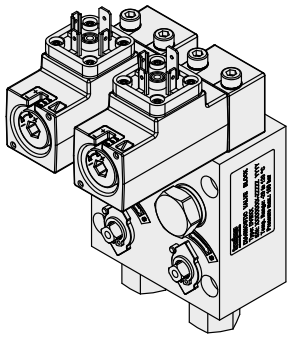

Diagnostic Valve Bloc (DVB)
see specification sheet H72361

Switching differential typ. @ 25°C								
Measuring range bellows sensor	**[bar]**	-0.6 ... 3.4	0 ... 4	0 ... 6	1 ... 10	1 ... 16	2 ... 25	4 ... 40
	[psi]	-8 ... 45	0 ... 50	0 ... 100	14 ... 150	14 ... 250	30 ... 400	60 ... 500
Microswitch 42/84/33: Switching differential not adjustable	**[bar]**	0.2 ± 0.1	0.2 ± 0.1	0.2 ± 0.1	0.4 ± 0.2	0.4 ± 0.2	1.0 ± 0.6	1.2 ± 0.8
	[psi]	4.5	4.5	4.5	9	9	22	26

Electrical data switch			
		Rating Resistive Load (Inductive Load)	
Type	**Features**	**AC**	**DC**
42/33 (Standard)	Silver contacts	250 V, 6 (1) A	220 V, 0.25 (0.1) A 110 V, 0.5 (0.2) A 60 V, 1(0.5) A 24 V, 3 (2) A 12 V, 6 (6) A
84	Gold plated contacts, suitable for intrinsically safe control circuits	max. 30 V, 0.1 (0.1) A min. 5 V, 5 mA	

Electrical connection

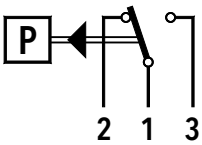

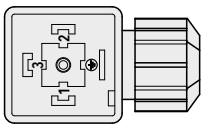

EN175301-803-A

Additional information		
Documents	Data sheet	www.trafag.com/H72367
	Instructions	www.trafag.com/H73367
	Flyer	www.trafag.com/H70655

PICOSTAT PRESSURE SWITCH

Swiss based Trafag is a leading international supplier of high quality sensors and monitoring instruments for measurement of pressure and temperature. The 9K4 of the Picostat series is based on our long lasting experience in the shipbuilding and railway sector. This further improved version offers high vibration resistance within a compact body and is suitable for a wide temperature range.

Applications

- Shipbuilding
- Engine manufacturing
- Railways
- Machine tools
- Hydraulics

Features

- Compact design
- Rugged housing
- Protection IP65 (with plug connector)
- Any mounting position possible

Technical Data			
Measuring principle	Piston	Repeatability	± 1.0 % FS typ.
Measuring range	1 ... 10 to 40 ... 400 bar 14 ... 150 to 580 ... 5800 psi	Media temperature	–25°C ... +125°C
Output signal	1 Floating change-over contact (SPDT)	Ambient temperature	-25°C ... +85°C
Switching differential	Not adjustable	Approval / conformity	ABS, BV, CCS, DNV-GL, KRS, LRS, RINA, EN60730-1/ EN60730-2-6: Typ 2.B.H

Subject to change

Ordering information/type code

		9K4 . XX	XX	XXX	XX	XX
Microswitch	Standard [1]	42				
	Standard [1]	33				
	Gold plated contacts [1]	84				

Range

Range [bar]	Over pressure [bar]		Range [psi]	Over pressure [psi]	
1 ... 10	100	78	14 ... 150	1450	G8
1 ... 16	100	79	14 ... 250	1450	G9
2 ... 25	100	80	30 ... 400	1450	H0
4 ... 40	100	81	60 ... 500	1450	H1
6 ... 60	200	82	85 ... 850	2900	H2
10 ... 100	200	83	150 ... 1500	2900	H3
16 ... 160	400	84	250 ... 2500	5800	H4
25 ... 250	400	85	350 ... 3500	5800	H5
40 ... 400	600	86	580 ... 5800	8700	H6

Sensor

Sensor material	Sensor housing material	Range	
Piston 1.4035, sealing PTFE [2]	Aluminium EN AW-6026 AlMgSiPb0.4 anodized	78, 79	756
Piston 1.4035, sealing PTFE [2]	Aluminium EN AW-6026 AlMgSiPb0.4 anodized	80, 81	757
Piston 1.4035, sealing PTFE	Aluminium EN AW-6026 AlMgSiPb0.4 anodized	82, 83	758
Piston 1.4035, sealing PTFE	Aluminium EN AW-6026 AlMgSiPb0.4 anodized	84, 85, 86	759

Pressure connection	G1/8" female	02	
	G1/4" female	04	
	M10x1 female [2]	03	

Accessories	Flange with O-Ring [3]	11
	Female electrical connector EN 175301-803-A (DIN43650-A)	46
	Welsh plug G1/4"	74
	Fixing set	V3
	Covering cap	15
	Lead seal (manipulation protection)	16
	Switch point adjustment on customers request Please indicate when ordering: - Switchpoint including measurement unit (kPa, bar, MPa, psi, abs. or rel.) - Increasing or decreasing	88
	Damping elements and snubber see data sheet H72258	

[1] Switching differential not adjustable
[2] Please ask us
[3] Only with pressure connection 04 (G1/4"), others upon request

Standard products (extra short lead time)

Product No.	Type Code	Pressure range [bar]	Over pressure max. [bar]	Switching differential [bar]
PST4K164	9K4 4279 756 04 0000 0000 15 46 V3	1 ... 16	100	0.4 ... 2.4 (fixed)
PST4K404	9K4 4281 757 04 0000 0000 15 46 V3	4 ... 40	100	1 ... 6 (fixed)
PST4K1004	9K4 4283 758 04 0000 0000 15 46 V3	10 ... 100	200	5 ... 15 (fixed)
PST4K2504	9K4 4285 759 04 0000 0000 15 46 V3	25 ... 250	400	12 ... 40 (fixed)
PST4K4004	9K4 4286 759 04 0000 0000 15 46 V3	40 ... 400	600	15 ... 50 (fixed)
PST4K16F4	9K4 4279 756 04 0000 0000 11 15 46 74 V3	1 ... 16	100	0.4 ... 2.4 (fixed)
PST4K40F4	9K4 4281 757 04 0000 0000 11 15 46 74 V3	4 ... 40	100	1 ... 6 (fixed)
PST4K100F4	9K4 4283 758 04 0000 0000 11 15 46 74 V3	10 ... 100	200	5 ... 15 (fixed)
PST4K250F4	9K4 4285 759 04 0000 0000 11 15 46 74 V3	25 ... 250	400	12 ... 40 (fixed)
PST4K400F4	9K4 4286 759 04 0000 0000 11 15 46 74 V3	40 ... 400	600	15 ... 50 (fixed)

Specifications		
Accuracy	Repeatability	± 1.0 % FS typ.
	Switching differential	See table
	Adjustment range switchpoint [2]	10 % ... 90 % FS
	Temperature dependence switching point	approx. + 0.1% FS/°C typ.
Environmental conditions	Ambient temperature	-25°C ... +85°C
	Media temperature	–25°C ... +125°C
	Storage temperature	–40°C ... +85°C
	Protection [1]	IP65
	Humidity	Max. 95 % relative
	Vibration	Switch IEC/EN 60068-2-6: 10...59 Hz: ±0.75 mm Ampl. 59...500 Hz: 5 g
	Shock	50 g / 3 ms
Mechanical Data	Sensor	See ordering information
	Housing	Aluminium EN AW-6026 AlMgSiPb0.4 anodized
	Sealing	PTFE
	Housing seal	EPDM 75 Sh
	Male electrical plug	Polyamide (PA)
	Mounting torque	G 1/4": M_A= 32 ... 40 Nm
	Installation	any position
	Weight	~ 200 g
Microswitch	Rating	See table
	Resistance of insulation	500 VDC > 10 MΩ
	Dielectric strength	(IEC/EN 60730-1) >1.5 kV AC/60 s terminal ground >500 VAC/60 s via open contacts
Electrical connection	Electrical connections	EN175301-803-A (DIN43650-A)
	Female electrical connector	Cable-Ø: 4...9 mm Terminal screw: 4 x 0.5...1.5 mm²

[1] Provided female connector is mounted according to instructions
[2] Other adjustment ranges upon request

Dimensions

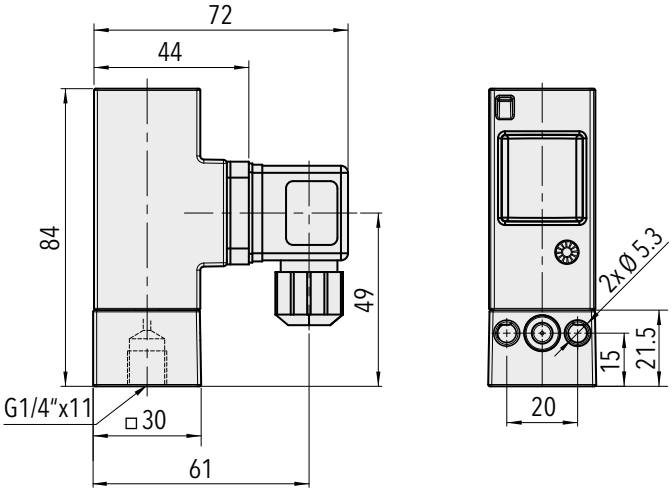

9K4.XXXX.7XX.**04**.46.V3

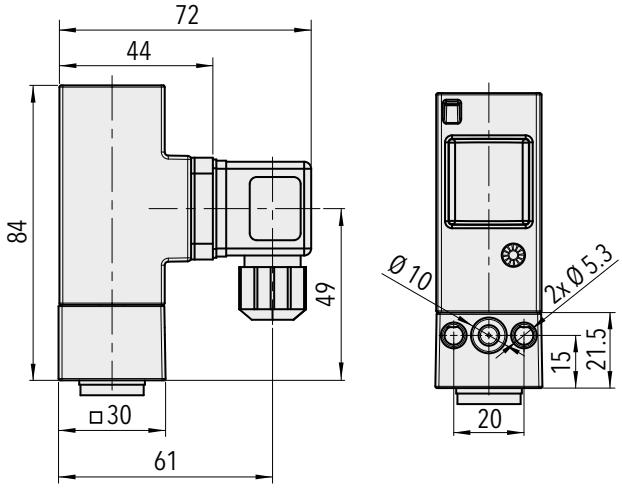

9K4.XXXX.7XX.04.**11**.46.74.V3

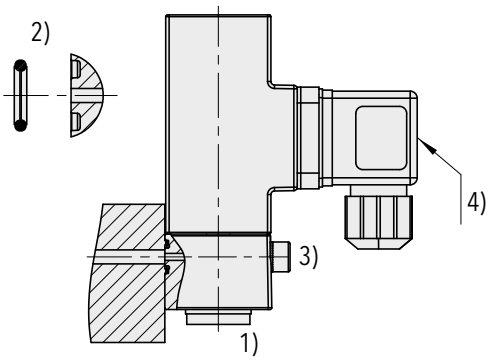

9K4.XXXX.XXX.XX.**11**

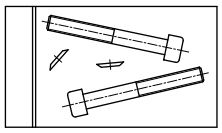

M5x40 ISO4762

9K4.XXXX.XXX.XX.**V3**

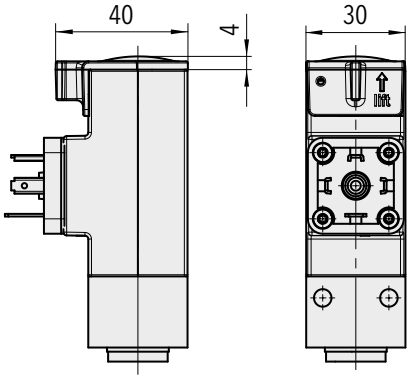

9K4.XXXX.XXX.XX.**15**

1) Torque: G 1/4": M_A = 32 ... 40 Nm
2) O-Ring: ø 6.75x1.78 NBR 90 Sh
3) Fixing screw: M5; property class: 8.8; torque: 4.5 ... 6 Nm
4) Torque connector center screw: max. 0.4 Nm

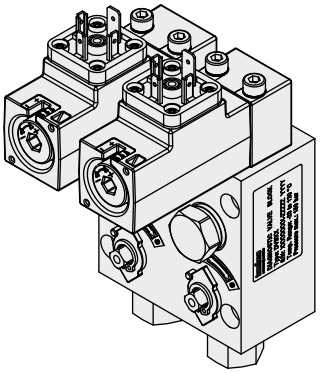

Diagnostic Valve Bloc (DVB)
see specification sheet H72361

Switching differential typ. @ 25°C						
Measuring range piston sensor	**[bar]** **[psi]**	1 ... 10 14 ... 150	1 ... 16 14 ... 250	2 ... 25 30 ... 400	4 ... 40 60 ... 500	6 ... 60 85 ... 850
Microswitch 42/84/33: Switching differential not adjustable	**[bar]** **[psi]**	0.4 ... 2.4 6 ... 35	0.4 ... 2.4 6 ... 35	1 ... 6 14.5 ... 88	1 ... 6 14.5 ... 88	5 ... 15 73 ... 218
Measuring range piston sensor	**[bar]** **[psi]**	10 ... 100 150 ... 1500	16 ... 160 250 ... 2500	25 ... 250 350 ... 3500	40 ... 400 580 ... 5800	
Microswitch 42/84/33: Switching differential not adjustable	**[bar]** **[psi]**	5 ... 15 73 ... 218	12 ... 40 174 ... 580	12 ... 40 174 ... 580	15 ... 50 218 ... 725	

Electrical data switch			
		Rating Resistive Load (Inductive Load)	
Type	**Features**	AC	DC
42/33 (Standard)	Silver contacts	250 V, 6 (1) A	220 V, 0.25 (0.1) A 110 V, 0.5 (0.2) A 60 V, 1(0.5) A 24 V, 3 (2) A 12 V, 6 (6) A
84	Gold plated contacts, suitable for intrinsically safe control circuits	max. 30 V, 0.1 (0.1) A min. 5 V, 5 mA	

Electrical Connection

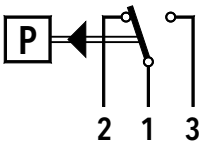

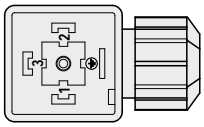

EN175301-803-A

Additional information		
Documents	Data sheet	www.trafag.com/H72369
	Instructions	www.trafag.com/H73367
	Flyer	www.trafag.com/H70667

PICOSTAT PRESSURE SWITCH

Swiss based Trafag is a leading international supplier of high quality sensors and monitoring instruments for measurement of pressure and temperature. The 9M4 of the Picostat series is based on our long lasting experience in the shipbuilding and railway sector. This further improved version offers high vibration resistance within a compact body and is suitable for a wide temperature range.

Applications

- Shipbuilding
- Engine manufacturing
- Railways
- Machine tools
- Hydraulics

Features

- Compact design
- Rugged housing
- Protection IP65
- Any mounting position possible

Technical Data			
Measuring principle	Membrane	Repeatability	± 2.0 % FS typ.
Measuring range	1 ... 10 to 10 ... 100 bar 14 ... 150 to 150 ... 1500 psi	Media temperature	0°C ... +80°C
Output signal	1 Floating change-over contact (SPDT)	Ambient temperature	0°C ... +80°C
Switching differential	Not adjustable	Approval / conformity	ABS, BV, CCS, DNV-GL, KRS, LRS, RINA, EN60730-1/ EN60730-2-6: Typ 2.B.H

Subject to change

Ordering information/type code

		9M4 . XX	XX	XXX	XX	XX
Microswitch	Standard [1]	42				
	Standard [1]	33				
	Gold plated contacts [1]	84				

Range

Range [bar]	Over pressure [bar]		Range [psi]	Over pressure [psi]	
1 ... 10	200	78	14 ... 150	2900	G8
1 ... 16	200	79	14 ... 250	2900	G9
2 ... 25	200	80	30 ... 400	2900	H0
4 ... 40	200	81	60 ... 500	2900	H1
6 ... 60	200	82	85 ... 850	2900	H2
10 ... 100	200	83	150 ... 1500	2900	H3

Sensor

Sensor material	Sensor housing material	Range	
FKM Membrane	Aluminium EN AW-6082 AlMgSi1 anodized	78, 79	761
FKM Membrane	Aluminium EN AW-6082 AlMgSi1 anodized	80, 81	762
FKM Membrane	Aluminium EN AW-6082 AlMgSi1 anodized	82, 83	763

Pressure connection	G1/8" female	02
	G1/4" female	04
	M10x1 female [2]	03

Accessories	Flange with O-Ring [3]	11
	Female electrical connector EN 175301-803-A (DIN43650-A)	46
	Welsh plug G1/4"	74
	Fixing set	V3
	Covering cap	15
	Lead seal (manipulation protection)	16
	Switch point adjustment on customers request Please indicate when ordering: - Switchpoint including measurement unit (kPa, bar, MPa, psi, abs. or rel.) - Increasing or decreasing	88
	Damping elements and snubber see data sheet H72258	

[1] Switching differential not adjustable
[2] Please ask us
[3] Only with pressure connection 04 (G1/4"), others upon request

Standard products (extra short lead time)

Product No.	Type Code	Pressure range [bar]	Over pressure max. [bar]	Switching differential [bar]
PST4M164	9M4 4279 761 04 0000 0000 15 46 V3	1 ... 16	200	0.2 ... 1.7 (fixed)
PST4M404	9M4 4281 762 04 0000 0000 15 46 V3	4 ... 40	200	1.2 ... 4.5 (fixed)
PST4M1004	9M4 4283 763 04 0000 0000 15 46 V3	10 ... 100	200	4 ... 16 (fixed)
PST4M16F4	9M4 4279 761 04 0000 0000 11 15 46 74 V3	1 ... 16	200	0.2 ... 1.7 (fixed)
PST4M40F4	9M4 4281 762 04 0000 0000 11 15 46 74 V3	4 ... 40	200	1.2 ... 4.5 (fixed)
PST4M100F4	9M4 4283 763 04 0000 0000 11 15 46 74 V3	10 ... 100	200	4 ... 16 (fixed)

Specifications		
Accuracy	Repeatability	± 2.0 % FS typ.
	Switching differential	See table
	Adjustment range switchpoint [2]	10 % ... 90 % FS
	Temperature dependence switching point	approx. + 0.1% FS/°C typ.
Environmental conditions	Ambient temperature	0°C ... +80°C
	Media temperature	0°C ... +80°C
	Storage temperature	-40°C ... +85°C
	Protection [1]	IP65
	Humidity	Max. 95 % relative
	Vibration	Switch IEC/EN 60068-2-6: 10...59 Hz: ±0.75 mm Ampl. 59...500 Hz: 5 g
	Shock	50 g / 3 ms
Mechanical Data	Sensor	See ordering information
	Housing	Aluminium EN AW-6082 AlMgSi1 anodized
	Sealing	FKM
	Housing seal	EPDM 75 Sh
	Male electrical plug	Polyamide (PA)
	Mounting torque	G 1/4": MA= 32 ... 40 Nm
	Installation	any position
	Weight	~ 200 g
Microswitch	Rating	See table
	Resistance of insulation	500 VDC > 10 MΩ
	Dielectric strength	(IEC/EN 60730-1) >1.5 kV AC/60 s terminal ground >500 VAC/60 s via open contacts
Electrical connection	Electrical connections	EN175301-803-A (DIN43650-A)
	Female electrical connector	Cable-Ø: 4...9 mm Terminal screw: 4 x 0.5...1.5 mm²

[1] Provided female connector is mounted according to instructions
[2] Other adjustment ranges upon request

Dimensions

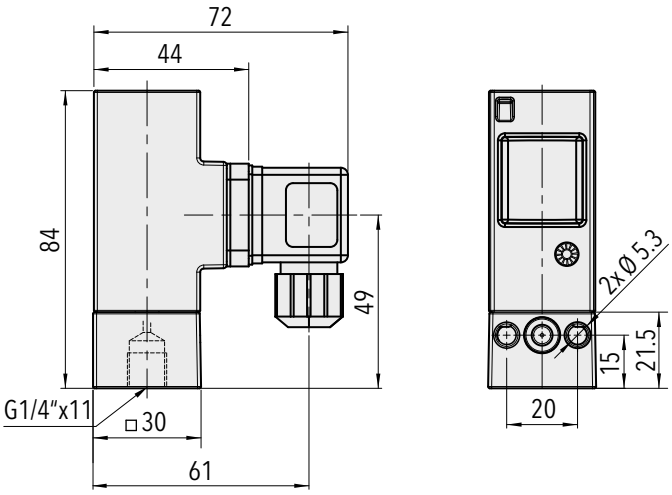

9M4.XXXX.7XX.**04**.46.V3

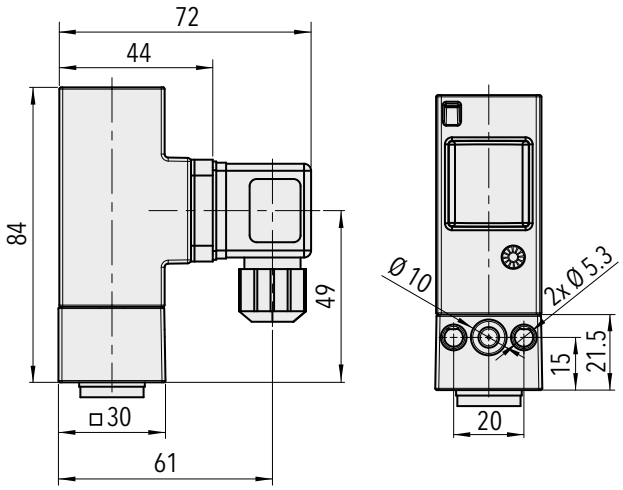

9M4.XXXX.7XX.04.**11**.46.74.V3

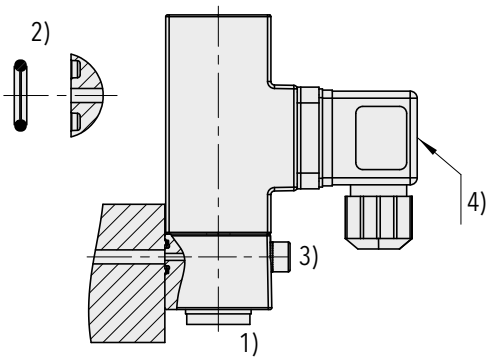

9M4.XXXX.XXX.XX.**11**

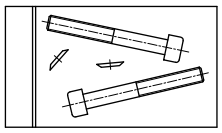

M5x40 ISO4762

9M4.XXXX.XXX.XX.V3

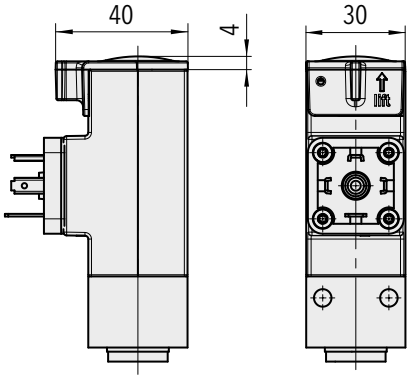

9M4.XXXX.XXX.XX.**15**

1) Torque: G 1/4": M_A = 32 ... 40 Nm
2) O-Ring: ø 6.75x1.78 NBR 90 Sh
3) Fixing screw: M5; property class: 8.8; torque: 4.5 ... 6 Nm
4) Torque connector center screw: max. 0.4 Nm

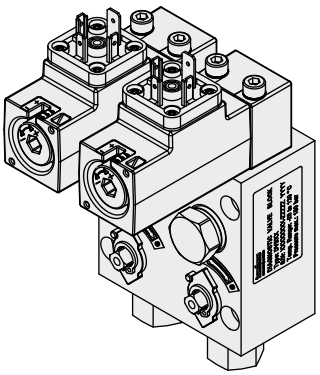

Diagnostic Valve Bloc (DVB)
see specification sheet H72361

Switching differential typ. @ 25°C							
Measuring range membrane sensor	**[bar]**	1 ... 10	1 ... 16	2 ... 25	4 ... 40	6 ... 60	10 ... 100
	[psi]	14 ... 150	14 ... 250	30 ... 400	60 ... 500	85 ... 850	150 ... 1500
Microswitch 42/84/33: Switching differential not adjustable	**[bar]**	0.2 ... 1.7	0.2 ... 1.7	1.2 ... 4.5	1.2 ... 4.5	4 ... 16	4 ... 16
	[psi]	3 ... 24.5	3 ... 24.5	18 ... 66	18 ... 66	58 ... 232	58 ... 232

Electrical data switch			
		Rating Resistive Load (Inductive Load)	
Type	**Features**	AC	DC
42/33 (Standard)	Silver contacts	250 V, 6 (1) A	220 V, 0.25 (0.1) A 110 V, 0.5 (0.2) A 60 V, 1(0.5) A 24 V, 3 (2) A 12 V, 6 (6) A
84	Gold plated contacts, suitable for intrinsically safe control circuits	max. 30 V, 0.1 (0.1) A min. 5 V, 5 mA	

Electrical Connection

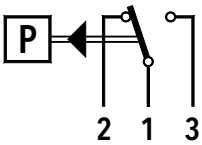

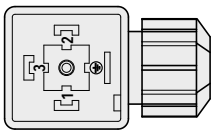

EN175301-803-A

Additional information		
Documents	Data sheet	www.trafag.com/H72368
	Instructions	www.trafag.com/H73367
	Flyer	www.trafag.com/H70668

DIFFERENTIAL PRESSURE PICOSTAT

Swiss based Trafag is a leading international supplier of high quality sensors and monitoring instruments for measurement of pressure and temperature.

Applications

- Shipbuilding
- Engine manufacturing
- Machine tools
- Hydraulics

Features

- Compact design
- Rugged housing
- High repeatability
- Protection IP65 (with plug connector)
- Any mounting position possible

Technical Data			
Measuring principle	Bellow	Repeatability	± 1.0 % FS typ.
Measuring range	-1 ... 6 and -1 ... 8 bar	Media temperature	-25°C ... +120°C
Differential pressure	0 ... 4 and 0 ... 6 bar	Ambient temperature	-25°C ... +85°C
Output signal	1 Floating change-over contact (SPDT)	Approval / conformity	GL EN60730-1/ EN60730-2-6: Typ 2.B.H
Switching differential	Not adjustable		

Subject to change

Ordering information/type code

								9D0 .	XX .	XX .	XXX .	XX . XX
Microswitch	Big switching differential [1]								20			
	Small switching differential [1]								28			
	Switch with gold plated contacts [1]								83			
Range	**Range [bar]**	**Differential pressure [bar]**	**Over pressure [bar]**	**Burst pressure [bar]**								
	-1 ... 6	0 ... 4	8	11.5						76		
	-1 ... 8	0 ... 6	12	26						77		
Sensor	**Sensor material**		**Sensor housing material**			**Range**						
	Bronze (CuZn6)		Brass (CuZn39Pb3)			76					770	
	Bronze (CuZn6)		Brass (CuZn39Pb3)			77					771	
Pressure connection	G1/4" female											04
Accessories	Flange with O-Ring											11
	Covering											15
	Lead seal (manipulation protection)											16
	Female electrical connector DIN43650-A											58
	Welsh plug G1/8"											57
	Welsh plug G1/4"											74
	Fixing set											V3
	Damping elements and snubber see data sheet H72258											

[1] Switching differential not adjustable

Standard products (extra short lead time)

Product No.	Type Code	Pressure range [bar]	Differential pressure [bar]	Over pressure max. [bar]	Switching differential [bar]
PSTD4	9D0 2076 770 04 0000 0000 15 58 V3	-1 ... 6	0 ... 4	8	0.2 (fixed)
PSTD6	9D0 2077 771 04 0000 0000 15 58 V3	-1 ... 8	0 ... 6	12	0.3 (fixed)

Specifications		
Accuracy	Repeatability	± 1.0 % FS typ.
	Switching differential	See table
	Adjustment range switchpoint [1)]	10% ... 90% FS
Environmental conditions	Ambient temperature	-25°C ... +85°C
	Media temperature	-25°C ... +120°C
	Storage temperature	-40°C ... +85°C
	Protection	IP65
	Humidity	Max. 95 % relative
	Vibration	5...25 Hz: ±1.6 mm 25...100 Hz: 4g
	Shock	50g/ 11ms
Mechanical Data	Sensor	Bronze (CuSn8)
	Housing	Brass CuZn39Pb3
	Sealing	-
	Male electrical plug	Polyamide PA
	Mounting torque	Max. 25 Nm
	Installation	any position
	Weight	~ 800 g
Microswitch	Rating	See table
	Resistance of insulation	> 2 MΩ
	Dielectric strength	1.45 kV terminal ground
	Life time (mechanical)	Microswitch 20: 1 Mio. cycles Microswitch 28/83: 10 Mio. cycles
Electrical connection	Electrical connections	EN175301-803-A (DIN43650-A)
	Female electrical connector	Cable-Ø: 6...13 mm Terminal screw: 4 x 0.5...1.5 mm²

[1)] Other adjustment ranges upon request

Dimensions

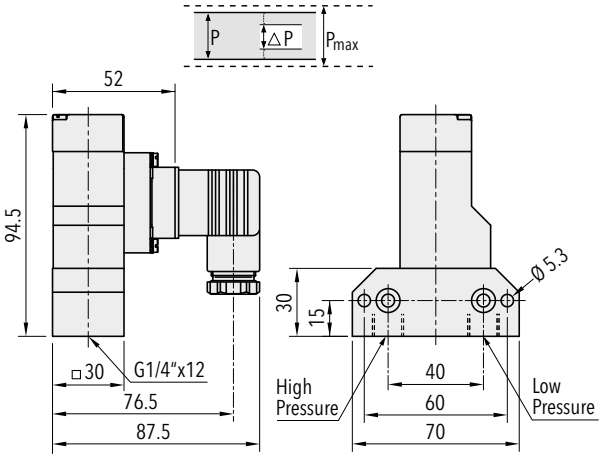

9D0.XX7X.77X.**04**.58.V3

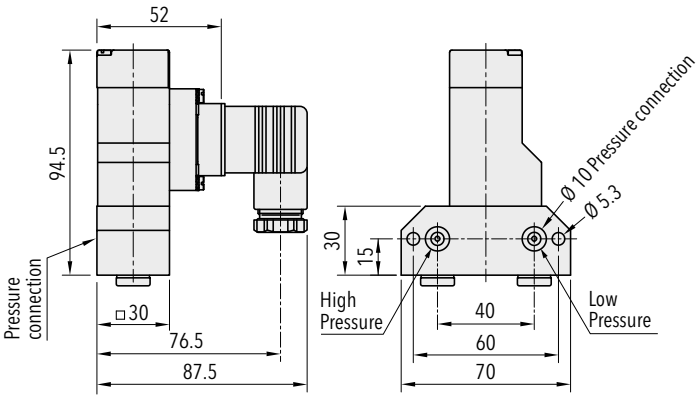

9D0.XX7X.77X.04.**11**.58.74.V3

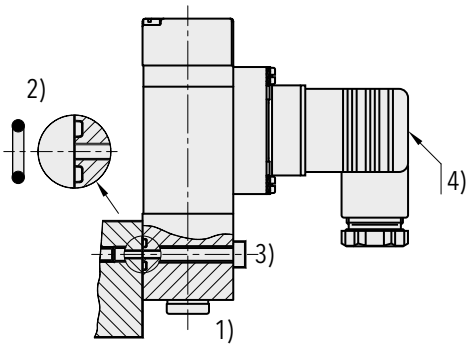

9D0.XXXX.XXX.XX.**11**

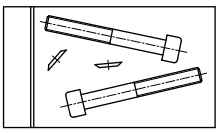

9D0.XXXX.XXX.XX.**V3**

1) Torque: G 1/8": M_A = 16 ... 20 Nm
G 1/4": M_A = 32 ... 40 Nm
2) O-Ring: ø 6.75x1.78 NBR 70 Sh
3) Fixing screw: M5; property class: 8.8; torque: 4.5...6 Nm
4) Torque connector center screw: max. 0.4 Nm

Switching differential typ. @ 25°C			
Measuring range of bellows sensor	**[bar]**	-1 ... 6	-1 ... 8
Microswitch 20 Switching differential (not adjustable)	**[bar]**	0.2	0.3
Microswitch 28/83 Switching differential (not adjustable)	**[bar]**	0.15	0.2

Electrical data switch			
		Rating Resistive Load (Inductive Load)	
Type	**Features**	**AC**	**DC**
20	Big switching differential	250 V, 10 (3) A	250 V, 0.1 (0.05) A 220 V, 0.25 (0.2) A 110 V, 0.5 (0.3) A 24 V, 2 (1) A
28	Small switching differential	250 V, 3 (1) A	250 V, 0.1 (0.05) A 220 V, 0.25 (0.2) A 110 V, 0.5 (0.3) A 24 V, 2 (1) A
83	Gold plated contacts, suitable for intrinsically safe control circuits	max. 30 V, 0.3 (0.2) A min. 5 V, 1 mA	

Electrical Connection

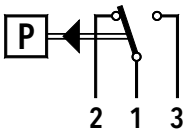

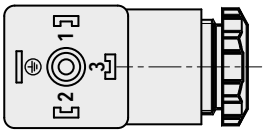

DIN 43650-5

Additional information		
Documents	Data sheet	www.trafag.com/H72273
	Instructions	www.trafag.com/H73273
	Flyer	www.trafag.com/H70913

PRESSOSTAT

Swiss based Trafag is a leading international supplier of high quality sensors and monitoring instruments for measurement of pressure and temperature.

Applications

- Shipbuilding
- Engine manufacturing
- Railways
- Machine tools
- Hydraulics

Features

- Rugged aluminium housing
- Protection IP65
- Any mounting position possible

Technical Data			
Measuring principle	Bellow	Repeatability	± 1.0 % FS typ.
Measuring range	-0.9 ... 1.5 to 10 ... 100 bar 5 ... 50 to 125 ... 1500 psi	Media temperature	-40°C ... +150°C
Output signal	1 Floating change-over contact (SPDT)	Ambient temperature	-25°C ... +70°C
Switching differential	Not adjustable	Approval / conformity	ABS, BV, CCS, DNV-GL, KRS, LRS, RINA EN60730-1/ EN60730-2-6: Typ 2.B.H

Subject to change

Ordering information/type code

		XXX	XX	XX	XXXXXX	XX	XX
Custom build code	With display and adjusting screw	900					
	Without display, with adjusting screw	904					
	With display and adjusting knob	912					
Microswitch	Small switching differential, standard vibration resistance [1) 2)]		10				
	Average switching differential, standard vibration resistance [1)]		11				
	Average switching differential, increased vibration resistance [1)]		23				
	Large switching differential, high vibration resistance [1)]		26				
	With gold plated contacts, standard vibration resistance [1)]		21				

Range

Range [bar]	Over pressure [bar]	Burst pressure [bar]	
-0.9 ... 1.5	10	13	**72**
0.2 ... 1.6	10	13	**73**
0.2 ... 2.5	10	13	**75**
0 ... 4	12	26	**76**
0 ... 6	12	26	**77**
1 ... 10	24	36	**78**
1 ... 16	24	36	**79**
2 ... 25	40	75	**80**
4 ... 40	40	75	**81**
6 ... 60	100	160	**82**
10 ... 100	100	160	**83**

Range [psi]	Over pressure [psi]	Burst pressure [psi]	
5 ... 50	175	350	**G6**
10 ... 100	350	500	**G8**
25 ... 200	350	500	**G9**
50 ... 500	500	1000	**H1**
125 ... 1500	1500	2300	**H3**

Sensor

Sensor material	Sensor housing material	Thread	Range	
Bronze bellow (CuSn6)	Brass (CuZn39Pb3)	G1/4" female	72	**900**
Bronze bellow (CuSn6)	Brass (CuZn39Pb3)	G1/4" female	73, 75	**901**
Bronze bellow (CuSn6)	Brass (CuZn39Pb3)	G1/4" female	76 ,77	**903**
Bronze bellow (CuSn6)	Brass (CuZn39Pb3)	G1/4" female	78, 79	**905**
Bronze bellow (CuSn6)	Brass (CuZn39Pb3)	G1/4" female	80, 81	**907**
Stainless steel 1.4435	Brass (CuZn39Pb3)	G1/4" female	82, 83	**940**
Bronze bellow (CuSn6)	Brass (CuZn39Pb3)	G1/2" male	72	**909**
Bronze bellow (CuSn6)	Brass (CuZn39Pb3)	G1/2" male	73, 75	**902**
Bronze bellow (CuSn6)	Brass (CuZn39Pb3)	G1/2" male	76, 77	**904**
Bronze bellow (CuSn6)	Brass (CuZn39Pb3)	G1/2" male	78, 79	**906**
Bronze bellow (CuSn6)	Brass (CuZn39Pb3)	G1/2" male	80, 81	**908**
Stainless steel 1.4435	Brass	G1/2" male	82, 83	**941**
Bronze bellows (CuSn6)	Brass (CuZn39Pb3)	1/4"NPT female	G6	**G6.I03**
Bronze bellows (CuSn6)	Brass (CuZn39Pb3)	1/4"NPT female	G8	**G8.I05**
Bronze bellows (CuSn6)	Brass (CuZn39Pb3)	1/4"NPT female	G9	**G9.I05**
Bronze bellows (CuSn6)	Brass (CuZn39Pb3)	1/4"NPT female	H1	**H1.I07**
Bronze bellows (CuSn6)	Brass (CuZn39Pb3)	1/4"NPT female	H3	**H3.I40**
Bronze bellow (CuSn6)	Brass chemically nickel plated	G1/4" female	72	**950**
Bronze bellow (CuSn6)	Brass chemically nickel plated	G1/4" female	73, 75	**951**
Bronze bellow (CuSn6)	Brass chemically nickel plated	G1/4" female	76 ,77	**953**

Sensor material	Sensor housing material	Thread	Range	
Bronze bellow (CuSn6)	Brass chemically nickel plated	G1/4" female	78, 79	**955**
Bronze bellow (CuSn6)	Brass chemically nickel plated	G1/4" female	80, 81	**957**
Bronze bellow (CuSn6)	Brass chemically nickel plated	G1/2" male	72	**959**
Bronze bellow (CuSn6)	Brass chemically nickel plated	G1/2" male	73, 75	**952**
Bronze bellow (CuSn6)	Brass chemically nickel plated	G1/2" male	76, 77	**954**
Bronze bellow (CuSn6)	Brass chemically nickel plated	G1/2" male	78, 79	**956**
Bronze bellow (CuSn6)	Brass chemically nickel plated	G1/2" male	80, 81	**958**
Stainless steel 1.4435	Brass nickel plated	G1/4" female	72	**800**
Stainless steel 1.4435	Brass nickel plated	G1/4" female	73, 75	**801**
Stainless steel 1.4435	Brass nickel plated	G1/4" female	76 ,77	**803**
Stainless steel 1.4435	Brass nickel plated	G1/4" female	78, 79	**805**
Stainless steel 1.4435	Brass nickel plated	G1/4" female	80, 81	**807**
Stainless steel 1.4435	Brass nickel plated	G1/4" female	82, 83	**840**
Stainless steel 1.4435	Brass nickel plated	G1/2" male	72	**809**
Stainless steel 1.4435	Brass nickel plated	G1/2" male	73, 75	**802**
Stainless steel 1.4435	Brass nickel plated	G1/2" male	76 ,77	**804**
Stainless steel 1.4435	Brass nickel plated	G1/2" male	78, 79	**806**
Stainless steel 1.4435	Brass nickel plated	G1/2" male	80, 81	**808**
Stainless steel 1.4435	Brass nickel plated	G1/2" male	82, 83	**841**

		XXX	XX	XX	XXXXXX	XX	XX
Fixing	Direct on sensor or housing					00	
	With mounting bracket					31	
Accessories	Lead seal (manipulation protection)						16
	Screwed cable gland M20x1.5 (EN 50262)						07
	Screwed cable gland M24x1.5 (DIN89280)						27
	Screwed cable gland M18x1.5 (DIN89280)						40
	Without screwed cable gland						33
	Railway version IEC 61373, category 2						28
	Damping elements and snubber see data sheet H72258						

[1] Switching differential not adjustable
[2] Not suitable for applications under vibration

Standard products (extra short lead time)

Product No.	Type Code	Pressure range [bar]	Over pressure max. [bar]	Switching differential [bar]	Diameter Y [mm]	Length X [mm]
P1.5	900 2672 900	-0.9 ... 1.5	10	0.1 (fixed)	45	56.5
P2.5	900 2675 901	0.2 ... 2.5	10	0.1 (fixed)	45	56.5
P4	900 2376 903	0 ... 4	12	0.2 (fixed)	33	47
P6	900 2377 903	0 ... 6	12	0.2 (fixed)	33	47
P10	900 2378 905	1 ... 10	24	0.4 (fixed)	27	42.5
P16	900 2379 905	1 ... 16	24	0.4 (fixed)	27	42.5
P25	900 2380 907	2 ... 25	40	1 (fixed)	33	47
P40	900 2381 907	4 ... 40	40	1 (fixed)	33	47
PS1.5	904 2672 900	-0.9 ... 1.5	10	0.1 (fixed)	45	56.5
PS2.5	904 2675 901	0.2 ... 2.5	10	0.1 (fixed)	45	56.5
PS6	904 2377 903	0 ... 6	12	0.2 (fixed)	33	47
PS16	904 2379 905	1 ... 16	24	0.4 (fixed)	27	42.5
PS40	904 2381 907	4 ... 40	40	1 (fixed)	27	42.5

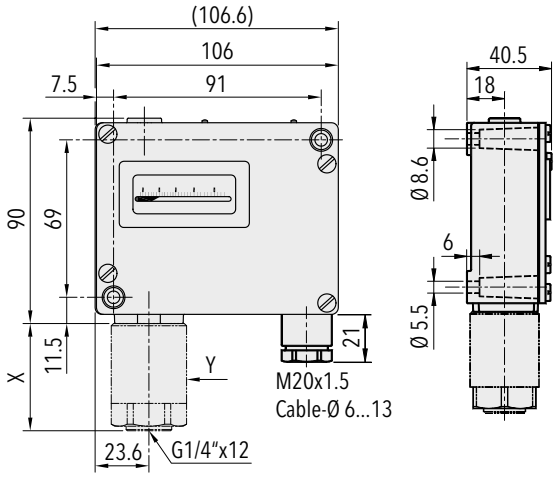

Specifications		
Accuracy	Repeatability	± 1.0 % FS typ.
	Scale accuracy typ.	± 2.0 % FS typ.
	Switching differential	See table
	Adjustment range switchpoint [1)]	10 % ... 90 % FS
Environmental conditions	Ambient temperature	-25°C ... +70°C
	Media temperature	-40°C ... +150°C
	Storage temperature	-25°C ... +85°C
	Protection	IP65
	Humidity	Max. 95% relative
	Vibration	Switch 23/26: 5...25 Hz: ±1.6 mm 25...100 Hz: 4 g Ranges 72, 73, 75, 5...50 Hz: 20 mm/sec.
	Shock	50 g / 11 ms
Mechanical Data	Sensor	See ordering information
	Housing	AlSi10Mg/ Epoxy coated
	Sealing	NBR
	Housing seal	EPDM 75 Sh
	Screwed cable gland	Brass nickel plated
	Male electrical plug	Polyamide (PA)
	Mounting torque	max. 25 Nm
	Installation	any position
	Weight	~ 710 g
Microswitch	Rating	See table
	Resistance of insulation	> 2 MΩ
	Dielectric strength	U ≤ 250V: 1.45 kV / U ≤ 500V: 2 kV terminal ground
	Life time (mechanical)	Microswitch 10/11: 20 Mio. cycles Microswitch 21: 0.5 Mio. cycles Microswitch 23/26: 0.3 Mio. cycles
Electrical connection	Electrical connections	Screw terminal
	Cable gland	M20x1.5 Cable-Ø 6...13 mm
	Terminal screw	3 x 1.5...4 mm²

[1)] Other adjustment ranges upon request

Additional information		
Documents	Data sheet	www.trafag.com/H72252
	Instructions	www.trafag.com/H71261
	Flyer	www.trafag.com/H70911

Dimensions

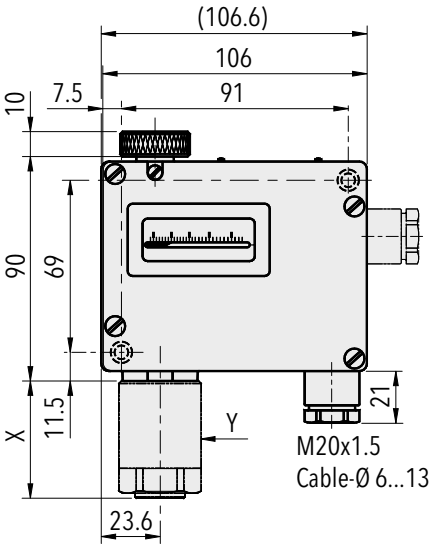

Dimension X and Y see data sheet H72271

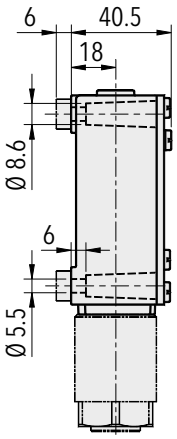

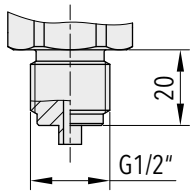

G1/2" male

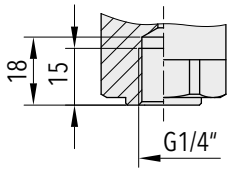

G1/4" female

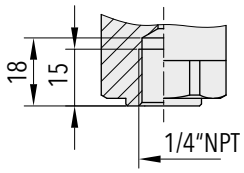

1/4"NPT female

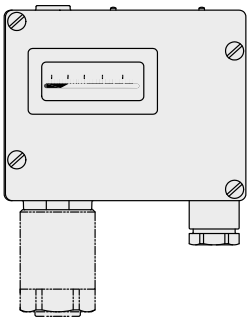

900.XX.XX.XXX.XX.XX

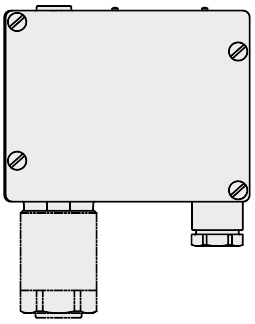

904.XX.XX.XXX.XX.XX

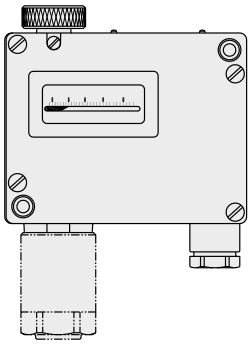

912.XX.XX.XXX.XX.XX

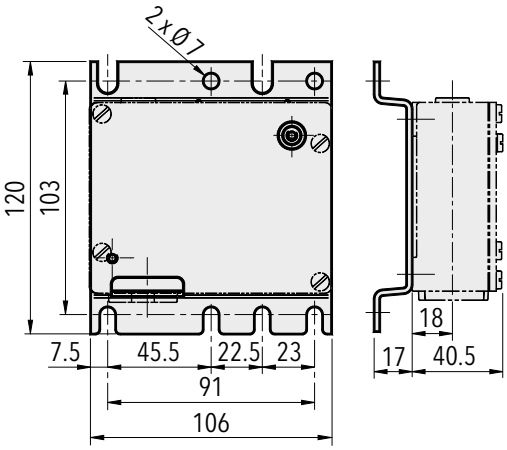

9XX.XX.XX.XXX.**31**.XX

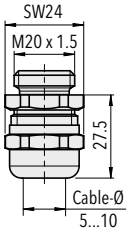

9XX.XX.XX.XXX.XX.**07**
M20x1.5

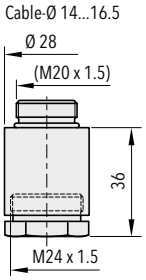

9XX.XX.XX.XXX.XX.**27**
M24x1.5

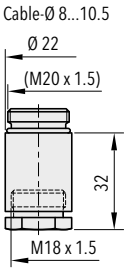

9XX.XX.XX.XXX.XX.**40**
M18x1.5

Switching differential typ. @ 25°C						
Measuring range of bellows sensor	**[bar]**	**-0.9 ... 1.5 0.2 ... 1.6 0.2 ... 2.5**	**0 ... 4 0 ... 6**	**1 ... 10 1 ... 16**	**2 ... 25 4 ... 40**	**6 ... 60 10 ... 100**
Microswitch 10 Switching differential (not adjustable)	**[bar]**	0.03	0.08	0.2	0.5	1.5
Microswitch 11/21/23 Switching differential (not adjustable)	**[bar]**	0.1	0.2	0.4	1.0	3.0
Microswitch 26 Switching differential (not adjustable)	**[bar]**	0.1	0.3	0.8	2.0	5.0
Measuring range of bellows sensor	**[psi]**	**5 ... 50**	**10 ... 100 25 ... 200**	**50 ... 500**	**125 ... 1500**	
Microswitch 10 Switching differential (not adjustable)	**[psi]**	1.2	3	7.5	22	
Microswitch 11/21/23 Switching differential (not adjustable)	**[psi]**	3	6	14.5	44	
Microswitch 26 Switching differential (not adjustable)	**[psi]**	4.4	12	30	72.5	

Electrical data switch			
		Rating Resistive Load (Inductive Load)	
Type	**Features**	AC	DC
10	Small switching differential (not recommended for applications under vibrations)	125 V 10 (1.5) A 250 V 10 (1.25) A	250 V 0.2 (0.02) A 125 V 0.4 (0.03) A 30 V 2 (1) A 14 V 15 (2.5) A
11	Average switching differential, standard vibration resistance	125 V 15 (1.5) A 250 V 15 (1.25) A 500 V 10 (0.75) A	250 V 0.25 (0.03) A 125 V 0.5 (0.05) A 30 V 6 (1.5) A 14 V 15 (1.5) A
23	Average switching differential, increased vibration resistance	125 V 15 (1.5) A 250 V 15 (1.25) A 500 V 10 (0.75) A	250 V 0.3 (0.05) A 125 V 0.6 (0.1) A 30 V 15 (1.5) A 14 V 15 (1.5) A
26	Large switching differential, high vibration resistance	125 V 15 (1.5) A 250 V 15 (1.25) A 500 V 10 (0.75) A	250 V 0.3 (0.2) A 125 V 0.75 (0.4) A 30 V 15 (1.5) A 14 V 15 (1.5) A
21	With gold plated contacts, standard vibration resistance	24 V 0.1 (0.1) A 12 V 1.0 (1.0) A 5 V 2.0 (2.0) A	24 V 0.1 (0.1) A 12 V 1.0 (1.0) A 5 V 2.0 (2.0) A

Electrical connection

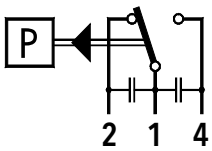

Switch 10/11/23

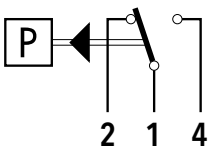

Switch 21/26

VARI PRESSOSTAT

Swiss based Trafag is a leading international supplier of high quality sensors and monitoring instruments for measurement of pressure and temperature.

Applications

- Shipbuilding
- Engine manufacturing
- Railways
- Machine tools
- Hydraulics

Features

- Rugged aluminium housing
- Protection IP65
- Any mounting position possible

Technical Data			
Measuring principle	Bellow	Repeatability	± 1.0 % FS typ.
Measuring range	-0.9 ... 1.5 to 4 ... 40 bar 5 ... 50 to 50 ... 500 psi	Media temperature	-40°C ... +150°C
Output signal	1 Floating change-over contact (SPDT)	Ambient temperature	-25°C ... +70°C
Switching differential	Adjustable	Approval / conformity	ABS, BV, CCS, GL, KRS, LRS, RINA EN60730-1/ EN60730-2-6: Typ 2.B.H
Switching point	Calibration for decreasing pressure		

Subject to change

Ordering information/type code

		XXX	XX	XX	XXXXXX	XX	XX
Custom build code	Large adjustable switching differential, with display and internal adjustment screw	**903**					
	Large adjustable switching differential, without display, with internal adjustment screw	**907**					
	Large adjustable switching differential, with display and external adjustment screw	**915**					
	Small adjustable switching differential, with display and internal adjustment screw	**940**					
	Small adjustable switching differential, without display, with internal adjustment screw	**941**					
	Small adjustable switching differential, with display and external adjustment screw	**942**					
Microswitch	Standard vibration resistance [1) 3)]		**11**				
	High vibration restistance [3)]		**12**				
	Increased vibration resistance [3)]		**23**				

Range

Range [bar]	Over pressure [bar]	Burst pressure [bar]	
-0.9 ... 1.5	10	13	**72**
0.2 ... 1.6	10	13	**73**
0.2 ... 2.5	10	13	**75**
0 ... 4	12	26	**76**
0 ... 6	12	26	**77**
1 ... 10	24	36	**78**
1 ... 16	24	36	**79**
2 ... 25	40	75	**80**
4 ... 40	40	75	**81**

Range [psi]	Over pressure [psi]	Burst pressure [psi]	
5 ... 50	175	350	**G6**
10 ... 100	350	500	**G8**
25 ... 200	350	500	**G9**
50 ... 500	500	1000	**H1**

Sensor

Sensor material	Sensor housing material	Thread	Range	
Bronze bellow (CuSn6)	Brass (CuZn39Pb3)	G1/4" female	72	**900**
Bronze bellow (CuSn6)	Brass (CuZn39Pb3)	G1/4" female	73, 75	**901**
Bronze bellow (CuSn6)	Brass (CuZn39Pb3)	G1/4" female	76 ,77	**903**
Bronze bellow (CuSn6)	Brass (CuZn39Pb3)	G1/4" female	78, 79	**905**
Bronze bellow (CuSn6)	Brass (CuZn39Pb3)	G1/4" female	80, 81	**907**
Bellow stainless steel 1.4435	Brass (CuZn39Pb3)	G1/4" female	82, 83	**940**
Bronze bellow (CuSn6)	Brass (CuZn39Pb3)	G1/2" male	72	**909**
Bronze bellow (CuSn6)	Brass (CuZn39Pb3)	G1/2" male	73, 75	**902**
Bronze bellow (CuSn6)	Brass (CuZn39Pb3)	G1/2" male	76, 77	**904**
Bronze bellow (CuSn6)	Brass (CuZn39Pb3)	G1/2" male	78, 79	**906**
Bronze bellow (CuSn6)	Brass (CuZn39Pb3)	G1/2" male	80, 81	**908**
Bellow stainless steel 1.4435	Brass (CuZn39Pb3)	G1/2" male	82, 83	**941**
Bronze bellow (CuSn6)	Brass (CuZn39Pb3)	1/4" NPT female	G6	**G6.I03**
Bronze bellow (CuSn6)	Brass (CuZn39Pb3)	1/4" NPT female	G8	**G8.I05**
Bronze bellow (CuSn6)	Brass (CuZn39Pb3)	1/4"NPT female	G9	**G9.I05**
Bronze bellow (CuSn6)	Brass (CuZn39Pb3)	1/4" NPT female	H1	**H1.I07**
Bronze bellow (CuSn6)	Brass chemically nickel plated	G1/4" female	72	**950**
Bronze bellow (CuSn6)	Brass chemically nickel plated	G1/4" female	73, 75	**951**
Bronze bellow (CuSn6)	Brass chemically nickel plated	G1/4" female	76 ,77	**953**

Sensor material	Sensor housing material	Thread	Range	
Bronze bellow (CuSn6)	Brass chemically nickel plated	G1/4" female	78, 79	**955**
Bronze bellow (CuSn6)	Brass chemically nickel plated	G1/4" female	80, 81	**957**
Bronze bellow (CuSn6)	Brass chemically nickel plated	G1/2" male	72	**959**
Bronze bellow (CuSn6)	Brass chemically nickel plated	G1/2" male	73, 75	**952**
Bronze bellow (CuSn6)	Brass chemically nickel plated	G1/2" male	76, 77	**954**
Bronze bellow (CuSn6)	Brass chemically nickel plated	G1/2" male	78, 79	**956**
Bronze bellow (CuSn6)	Brass chemically nickel plated	G1/2" male	80, 81	**958**
Bellows stainless steel 1.4435 [2)]	Brass nickel plated	G1/4" female	72	**800**
Bellows stainless steel 1.4435 [2)]	Brass nickel plated	G1/4" female	73, 75	**801**
Bellows stainless steel 1.4435 [2)]	Brass nickel plated	G1/4" female	76 ,77	**803**
Bellows stainless steel 1.4435 [2)]	Brass nickel plated	G1/4" female	78, 79	**805**
Bellows stainless steel 1.4435 [2)]	Brass nickel plated	G1/4" female	80, 81	**807**
Bellows stainless steel 1.4435 [2)]	Brass nickel plated	G1/4" female	82, 83	**840**
Bellows stainless steel 1.4435 [2)]	Brass nickel plated	G1/2" male	72	**809**
Bellows stainless steel 1.4435 [2)]	Brass nickel plated	G1/2" male	73, 75	**802**
Bellows stainless steel 1.4435 [2)]	Brass nickel plated	G1/2" male	76 ,77	**804**
Bellows stainless steel 1.4435 [2)]	Brass nickel plated	G1/2" male	78, 79	**806**
Bellows stainless steel 1.4435 [2)]	Brass nickel plated	G1/2" male	80, 81	**808**
Bellows stainless steel 1.4435 [2)]	Brass nickel plated	G1/2" male	82, 83	**841**

		XXX	XX	XX	XXXXXX	XX	XX
Fixing	Direct on sensor or housing					00	
	With mounting bracket					31	
Accessories	Lead seal (manipulation protection)						16
	Screwed cable gland M20x1.5 (EN50262)						07
	Screwed cable gland M24x1.5 (DIN89280)						27
	Screwed cable gland M18x1.5 (DIN89280)						40
	Damping elements and snubber see data sheet H72258						

[1] Switch 11 only with typ No. 940, 941, 942
[2] Material with medium contact: 1.4435
[3] Switching differential adjustable

Standard products (extra short lead time)

Product No.	Type Code	Pressure range [bar]	Over pressure max. [bar]	Switching differential [bar]	Diameter Y [mm]	Length X [mm]
PV6	903 2377 903	0 ... 6	12	0.4 ... 3.2 (adjustable)	33	47
PV16	903 2379 905	1 ... 16	24	1 ... 7.5 (adjustable)	27	42.5
PV40	903 2381 907	4 ... 40	40	3 ... 18 (adjustable)	27	42.5
PVF1.5	940 2372 900	-0.9 ... 1.5	10	0.06 ... 0.2 (adjustable)	45	56.5
PVF2.5	940 2375 901	0.2 ... 2.5	10	0.06 ... 0.2 (adjustable)	45	56.5
PVF6	940 2377 903	0 ... 6	12	0.2 ... 0.6 (adjustable)	33	47
PVF16	940 2379 905	1 ... 16	24	0.5 ... 1.6 (adjustable)	27	42.5

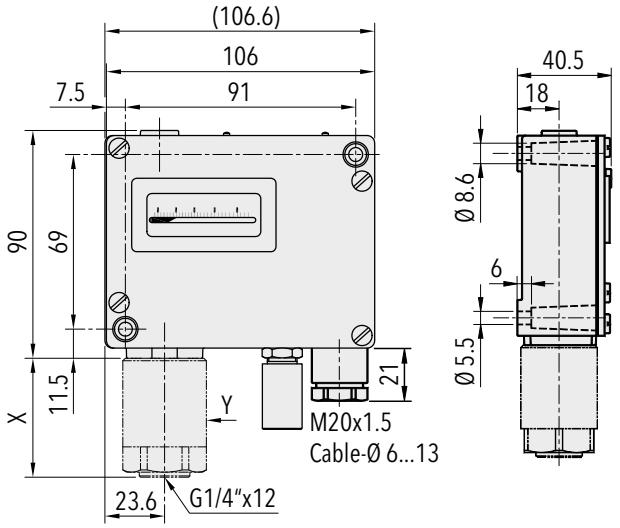

Specifications		
Accuracy	Repeatability	± 1.0 % FS typ.
	Scale accuracy typ.	± 2.0 % FS typ.
	Switching differential	See table
	Adjustment range switchpoint [1)]	10% ... 90% FS
Environmental conditions	Ambient temperature	-25°C ... +70°C
	Media temperature	-40°C ... +150°C
	Storage temperature	-25°C ... +85°C
	Protection	IP65
	Humidity	Max.95 % relative
	Vibration	5...25 Hz: ±1.6 mm 25...100 Hz: 4g Ranges 72, 73, 75 5...50 Hz: 20 mm/sec.
	Shock	50g/ 11ms
Mechanical Data	Sensor	See ordering information
	Housing	AlSi10Mg/ Epoxy coated
	Sealing	NBR
	Screwed cable gland	Brass nickel plated
	Mounting torque	Max. 25 Nm
	Installation	any position
	Weight	~ 710 g
Microswitch	Rating	See table
	Resistance of insulation	500 VDC/100 MΩ
	Dielectric strength	2 kV terminal ground
	Life time (mechanical)	Microswitch 11: 20 Mio. cycles Microswitch 12/23: 0.3 Mio. cycles
Electrical connection	Electrical connections	Terminal screw
	Cable gland	M20x1.5 Cable-Ø 6...13 mm
	Terminal screw	3 x 1.5...4 mm²

[1)] Other adjustment ranges upon request

Additional information		
Documents	Data sheet	www.trafag.com/H72257
	Instructions	www.trafag.com/H71261
	Flyer	www.trafag.com/H70910

Dimensions

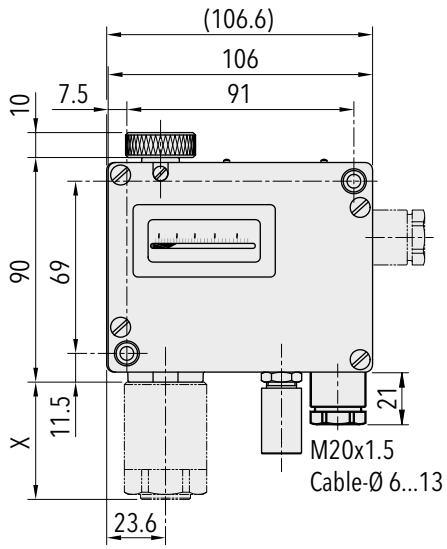

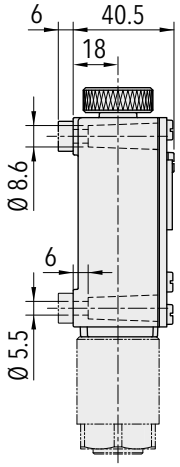

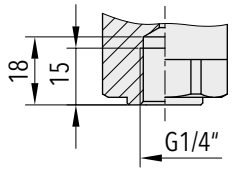

G1/4" female

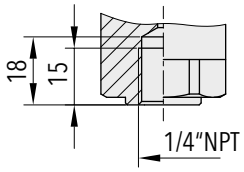

1/4"NPT female

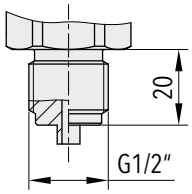

G1/2" male

Dimension X and Y see data sheet H72271

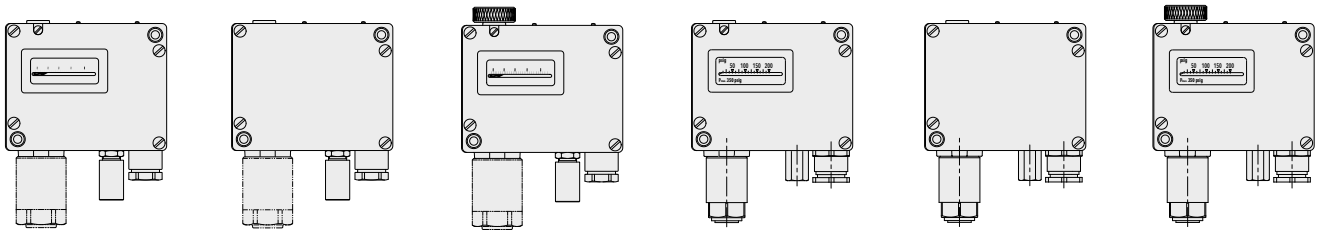

903 **907** **915** **940** **941** **942**

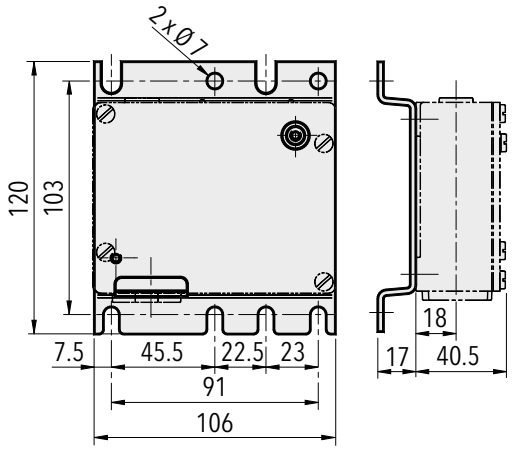

9XX.XX.XX.XXX.**31**.XX

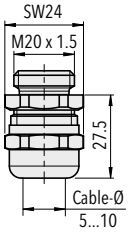

9XX.XX.XX.XXX.XX.**07**

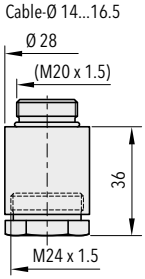

9XX.XX.XX.XXX.XX.**27**

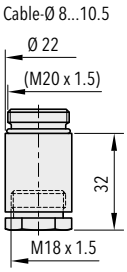

9XX.XX.XX.XXX.XX.**40**

Switching differential typ. @ 25°C					
Measuring range of bellows sensor	**[bar]**	**-0.9 ... 1.5** **0.2 ... 1.6** **0.2 ... 2.5**	**0 ... 4** **0 ... 6**	**1 ... 10** **1 ... 16**	**2 ... 25** **4 ... 40**
Adjustable range of switching differential Microswitch 12, 23 (Type 903/907/915)	**[bar]**	0.1 ... 1.3	0.4 ... 3.2	1 ... 7.5	3 ... 18
Adjustable range of switching differential Microswitch 11, 12, 23 (Type 940/941/942)	**[bar]**	0.06 ... 0.2	0.2 ... 0.6	0.5 ... 1.6	1 ... 4
Measuring range of bellows sensor	**[psi]**	**5 ... 50**	**10 ... 100** **25 ... 200**	**50 ... 500**	
Adjustable range of switching differential Microswitch 12, 23 (Type 903/907/915)	**[psi]**	6 ... 40	15 ... 105	45 ... 260	
Adjustable range of switching differential Microswitch 11, 12, 23 (Type 940/941/942)	**[psi]**	3 ... 8	8 ... 20	15 ... 55	

Electrical data switch			
		Rating Resistive Load (Inductive Load)	
Type	Features	**AC**	**DC**
11*)	Average switching differential	125 V, 15 (1.5) A 250 V, 15 (1.25) A 500 V, 10 (0.75) A	250 V, 0.25 (0.03) A 125 V, 0.5 (0.05) A 30 V, 6 (1.5) A 14 V, 15 (1.5) A
12	High vibration resistance; average switching differential	125 V, 15 (1.5) A 250 V, 15 (1.25) A 500 V, 10 (0.75) A	250 V, 0.3 (0.2) A 125 V, 0.75 (0.4) A 30 V, 15 (1.5) A 14 V, 15 (1.5) A
23	Increased vibration resistance; average switching differential	125 V, 15 (1.5) A 250 V, 15 (1.25) A 500 V, 10 (0.75) A	250 V, 0.3 (0.2) A 125 V, 0.6 (0.4) A 30 V, 15 (1.5) A 14 V, 15 (1.5) A

*) Switch 11 only with type No. 940, 941, 942

Electrical Connection

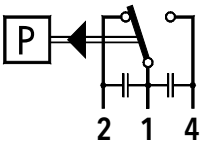

Switch **11/12/23**

PRESSOSTAT

Swiss based Trafag is a leading international supplier of high quality sensors and monitoring instruments for measurement of pressure and temperature.

Applications

- Shipbuilding
- Engine manufacturing
- Railways
- Machine tools
- Hydraulics

Features

- Rugged aluminium housing
- Protection IP65
- Any mounting position possible

Technical Data			
Measuring principle	Piston	Repeatability	± 1.0 % FS typ.
Measuring range	1 ... 10 to 60 ... 600 bar	Media temperature	O-Ring NBR: -30°C ... +100°C O-Ring FKM: -15°C ... +150°C
Output signal	1 Floating change-over contact (SPDT)	Ambient temperature	-20°C ... +70°C
Switching differential	Not adjustable	Approval / conformity	ABS, BV, CCS, DNV-GL, KRS, LRS, RINA EN60730-1/ EN60730-2-6: Typ 2.B.H

Subject to change

Ordering information/type code

		XXX	XX	XX	XXX	XX	XX
Custom build code	With display and adjusting screw	944					
	Without display, with adjusting screw	947					
Microswitch	Small switching differential, standard vibration resistance [1) 2)]		10				
	Average switching differential, standard vibration resistance [1)]		11				
	Average switching differential, increased vibration resistance [1)]		23				
	Large switching differential, high vibration resistance [1)]		26				
	With gold plated contacts, standard vibration resistance [1)]		21				

Range

Range [bar]	Over pressure [bar]	Burst pressure [bar]	
1 ... 10	100	200	**78**
4 ... 40	200	400	**81**
6 ... 60	200	400	**82**
10 ... 100	200	400	**83**
16 ... 160	400	600	**84**
25 ... 250	400	600	**85**
40 ... 400	800	1000	**86**
60 ... 600	800	1000	**87**

Sensor

Sensor material	Sensor housing material	Thread	Range	
1.4435, O-Ring NBR	1.4435	G1/4" female	78	**700**
1.4435, O-ring FKM	1.4435	G1/4" female	78	**701**
1.4435, O-ring NBR	1.4435	G1/2" male	78	**702**
1.4435, O-ring FKM	1.4435	G1/2" male	78	**703**
1.4435, O-Ring NBR	1.4435	G1/4" female	81	**704**
1.4435, O-Ring FKM	1.4435	G1/4" female	81	**705**
1.4435, O-Ring NBR	1.4435	G1/2" male	81	**706**
1.4435, O-Ring FKM	1.4435	G1/2" male	81	**707**
1.4435, O-Ring NBR	1.4435	G1/4" female	82, 83	**708**
1.4435, O-Ring FKM	1.4435	G1/4" female	82, 83	**709**
1.4435, O-Ring NBR	1.4435	G1/2" male	82, 83	**710**
1.4435, O-Ring FKM	1.4435	G1/2" male	82, 83	**711**
1.4435, O-Ring NBR	1.4435	G1/4" female	84, 85	**712**
1.4435, O-Ring FKM	1.4435	G1/4" female	84, 85	**713**
1.4435, O-Ring NBR	1.4435	G1/2" male	84, 85	**714**
1.4435, O-Ring FKM	1.4435	G1/2" male	84, 85	**715**
1.4435, O-Ring NBR	1.4435	G1/4" female	86, 87	**722**
1.4435, O-Ring FKM	1.4435	G1/4" female	86, 87	**723**
1.4435, O-Ring NBR	1.4435	G1/2" male	86, 87	**724**
1.4435, O-Ring FKM	1.4435	G1/2" male	86, 87	**725**

Fixing	Direct on sensor or housing				00	
	With mounting bracket				31	
Accessories	Lead seal (manipulation protection)					16
	Screwed cable gland M20x1.5 (EN50262)					07
	Screwed cable gland M24x1.5 (DIN89280)					27
	Screwed cable gland M18x1.5 (DIN89280)					40
	Damping elements and snubber see data sheet H72258					

[1)] Switching differential not adjustable
[2)] Not suitable for applications under vibration

Standard products (extra short lead time)

Product No.	Type Code	Pressure range [bar]	Over pressure max. [bar]	Switching differential [bar]	Diameter Y [mm]	Length X [mm]
PK10	944 2378 700	1 ... 10	100	0.45 ... 0.9 (fix)	33	47
PK40	944 2381 704	4 ... 40	200	1.8 ... 3.4 (fix)	27	42.5
PK100	944 2383 708	10 ... 100	200	3.2 ... 7.5 (fix)	27	42.5
PK250	944 2385 712	25 ... 250	400	5.2 ... 16 (fix)	27	42.5

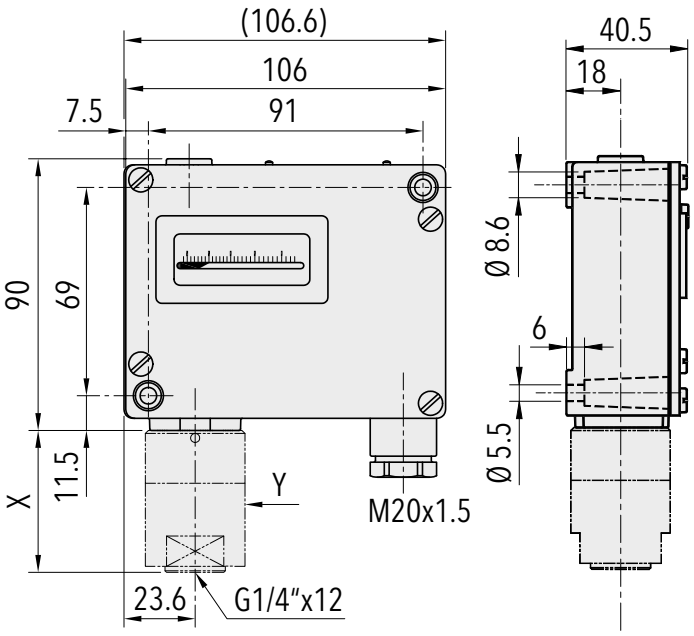

Specifications		
Accuracy	Repeatability	± 1.0 % FS typ.
	Scale accuracy typ.	± 2.0 % FS typ.
	Switching differential	See table
	Adjustment range switchpoint [1)]	10% ... 90% FS
Environmental conditions	Ambient temperature	-20°C ... +70°C
	Media temperature	O-Ring NBR: -30°C ... +100°C O-Ring FKM: -15°C ... +150°C
	Storage temperature	-25°C ... +85°C
	Protection	IP65
	Humidity	Max.95 % relative
	Vibration	Switch 23/26: 5...25 Hz: ±1.6 mm 25...100 Hz: 4g
	Shock	50g/ 11ms
Mechanical Data	Sensor	1.4435
	Housing	AlSi10Mg/ Epoxy coated
	Sealing	NBR/FKM
	Screwed cable gland	Brass nickel plated
	Mounting torque	Max. 25 Nm
	Installation	any position
	Weight	~ 710 g
Microswitch	Rating	See table
	Resistance of insulation	500 VDC / 100 MΩ
	Dielectric strength	U ≤ 250V: 1.45 kV / U ≤ 500V: 2 kV terminal ground
	Life time (mechanical)	Microswitch 10/11: 20 Mio. cycles Microswitch 21: 0.5 Mio. cycles Microswitch 23/26: 0.3 Mio. cycles
Electrical connection	Electrical connections	Terminal screw
	Cable gland	M20x1.5 Cable-Ø 6...13 mm
	Terminal screw	3 x 1.5...4 mm²

[1)] Other adjustment ranges upon request

Additional information		
Documents	Data sheet	www.trafag.com/H72259
	Instructions	www.trafag.com/H71261
	Flyer	www.trafag.com/H70912

Dimensions

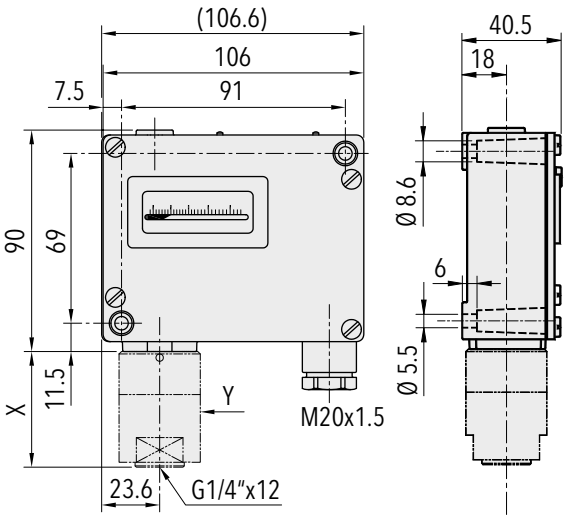

Dimension X and Y see data sheet H72271

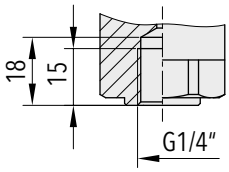

G1/4" female

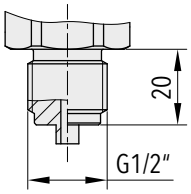

G1/2" male

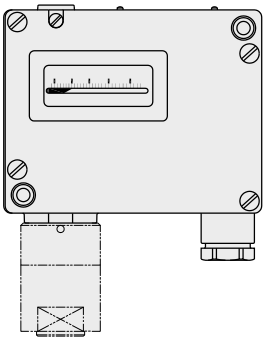

944.XX.XX.XXX.XX.XX

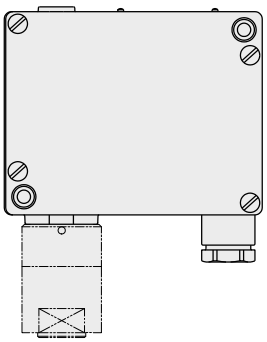

947.XX.XX.XXX.XX.XX

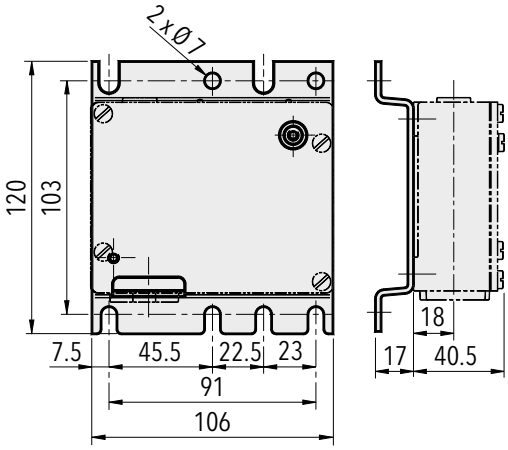

94X.XX.XX.XXX.**31**.XX

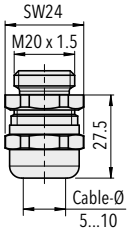

94X.XX.XX.XXX.XX.**07**
M20x1.5

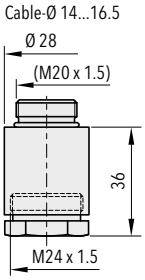

94X.XX.XX.XXX.XX.**27**
M24x1.5

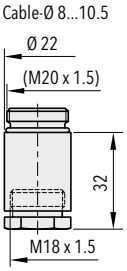

94X.XX.XX.XXX.XX.**40**
M18x1.5

Switching differential typ. @ 25°C									
Measuring range of piston sensor	**[bar]**	1 ... 10	4 ... 40	6 ... 60	10 ... 100	16 ... 160	25 ... 250	40 ... 400	60 ... 600
Microswitch 10 Switching differential (not adjustable, variable according to set point)	**[bar]**	0.4 ... 0.8	1.5 ... 2.5	2.0 ... 3.7	2.6 ... 5.5	3.4 ... 8.0	4.3 ... 11	5.3 ... 16	6.5 ... 21
Microswitch 11, 21, 23 Switching differential (not adjustable, variable according to set point)	**[bar]**	0.45 ... 0.9	1.8 ... 3.4	2.3 ... 4.8	3.2 ... 7.5	4.1 ... 11	5.2 ... 16	6.5 ... 23	8.0 ... 32
Microswitch 26 Switching differential (not adjustable, variable according to set point)	**[bar]**	0.55 ... 1.1	2.0 ... 4.0	2.7 ... 5.7	3.7 ... 9.0	4.7 ... 13	6.0 ... 19	7.5 ... 28	9.0 ... 38

Electrical data switch			
		Rating Resistive Load (Inductive Load)	
Type	**Features**	**AC**	**DC**
10	Small switching differential (not recommended for applications under vibrations)	125 V, 10 (1.5) A 250 V, 10 (1.25) A	250 V, 0.2 (0.02) A 125 V, 0.4 (0.03) A 30 V, 2 (1) A 14 V, 15 (2.5) A
11	Average switching differential, standard vibration resistance	125 V, 15 (1.5) A 250 V, 15 (1.25) A 500 V, 10 (0.75) A	250 V, 0.25 (0.03) A 125 V, 0.5 (0.05) A 30 V, 6 (1.5) A 14 V, 15 (1.5) A
23	Average switching differential, increased vibration resistance	125 V, 15 (1.5) A 250 V, 15 (1.25) A 500 V, 10 (0.75) A	250 V, 0.3 (0.05) A 125 V, 0.6 (0.1) A 30 V, 15 (1.5) A 14 V, 15 (1.5) A
26	Large switching differential, high vibration resistance	125 V, 15 (1.5) A 250 V, 15 (1.25) A 500 V, 10 (0.75) A	250 V, 0.3 (0.2) A 125 V, 0.75 (0.4) A 30 V, 15 (1.5) A 14 V, 15 (1.5) A
21	With gold plated contacts, standard vibration resistance	24 V, 0.1 (0.1) A 12 V, 1 (1.0) A 5 V, 2 (2.0) A	24 V, 0.1 (0.1) A 12 V, 1 (1.0) A 5 V, 2 (2.0) A

Electrical Connection

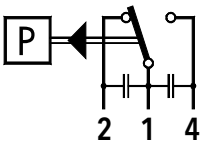

Switch 11/12/23

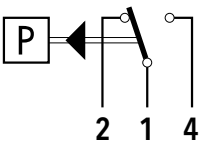

Switch 26

DIFFERENTIAL PRESSURE PRESSOSTAT

Swiss based Trafag is a leading international supplier of high quality sensors and monitoring instruments for measurement of pressure and temperature.

Applications

- Shipbuilding
- Engine manufacturing
- Railways
- Machine tools
- Hydraulics

Features

- Rugged aluminium housing
- Protection IP65
- Any mounting position possible

Technical Data			
Measuring principle	Bellow	Repeatability	± 1.0 % FS typ.
Measuring range	-1 ... 6 to -1 ... 18 bar	Media temperature	-40°C ... +150°C
Differential pressure	-0.6 ... 3.4 to 1 ... 16 bar	Ambient temperature	-25°C ... +70°C
Output signal	1 Floating change-over contact (SPDT)	Approval / conformity	ABS, BV, CCS, DNV-GL, KRS, LRS, RINA EN60730-1/ EN60730-2-6: Typ 2.B.H
Switching differential	Not adjustable		

Subject to change

Ordering information/type code

		XXX	XX	XX	XXX	XX	XX
Custom build code	With display and adjusting screw	920					
	Without display, with adjusting screw	924					
	With display and adjusting knob	932					
Microswitch	Small switching differential, standard vibration resistance [1) 2)]		10				
	Average switching differential, standard vibration resistance [1)]		11				
	Average switching differential, increased vibration resistance [1)]		23				
	Large switching differential, high vibration resistance [1)]		26				
	With gold plated contacts, standard vibration resistance [1)]		21				

Range

Range [bar]	Differential pressure [bar]	Over pressure [bar]	Burst pressure [bar]	
-1 ... 6	-0.6 ... 3.4	12	26	74
-1 ... 6	0 ... 4	12	26	76
-1 ... 8	0 ... 6	12	26	77
-1 ... 12	1 ... 10	24	36	78
-1 ... 18	1 ... 16	24	36	79

Sensor

Sensor material	Sensor housing material	Range	Thread	
Bellows: 1.4435, medium contact. parts 1.4435	Brass nickel plated	74	G1/4" female	830
Bellows: 1.4435, medium contact. parts 1.4435	Brass nickel plated	74	G1/8" female	831
Bellows: 1.4435, medium contact. parts 1.4435	Brass nickel plated	74	G1/2" male	832
Bellows: 1.4435, medium contact. parts 1.4435	Brass nickel plated	76, 77	G1/8" female	833
Bellows: 1.4435, medium contact. parts 1.4435	Brass nickel plated	76, 77	G1/2" male	834
Bellows: 1.4435, medium contact. parts 1.4435	Brass nickel plated	76, 77	G1/4" female	837
Bellows: 1.4435, medium contact. parts 1.4435	Brass nickel plated	78, 79	G1/8" female	835
Bellows: 1.4435, medium contact. parts 1.4435	Brass nickel plated	78, 79	G1/2" male	836
Bellows: 1.4435, medium contact. parts 1.4435	Brass nickel plated	78, 79	G1/4" female	838
Bronze	Brass	74	G1/4" female	930
Bronze	Brass	74	G1/8" female	931
Bronze	Brass	74	G1/2" male	932
Bronze	Brass	76, 77	G1/8" female	933
Bronze	Brass	76, 77	G1/2" male	934
Bronze	Brass	76, 77	G1/4" female	937
Bronze	Brass	78, 79	G1/8" female	935
Bronze	Brass	78, 79	G1/2" male	936
Bronze	Brass	78, 79	G1/4" female	938
Bronze	Brass chemically nickel plated	74	G1/4" female	980
Bronze	Brass chemically nickel plated	74	G1/8" female	981
Bronze	Brass chemically nickel plated	74	G1/2" male	982
Bronze	Brass chemically nickel plated	76, 77	G1/8" female	983
Bronze	Brass chemically nickel plated	76, 77	G1/2" male	984
Bronze	Brass chemically nickel plated	76, 77	G1/4" female	987
Bronze	Brass chemically nickel plated	78, 79	G1/8" female	985
Bronze	Brass chemically nickel plated	78, 79	G1/2" male	986
Bronze	Brass chemically nickel plated	78, 79	G1/4" female	988

Fixing	Direct on sensor or housing		00
	By mounting bracket		31

		XXX	XX	XX	XXX	XX	XX
Accessories	Lead seal (manipulation protection)						**16**
	Screwed cable gland M20x1.5 (EN50262)						**07**
	Screwed cable gland M24x1.5 (DIN89280)						**27**
	Screwed cable gland M18x1.5 (DIN89280)						**40**
	Adapter G1/8" male - G1/2" male, Brass						**A6**
	Adapter G1/8" male - G1/2" male, Brass nickel plated						**B6**
	Adapter G1/8" male - G1/2" male, Stainless steel 1.4435						**D6**
	Adapter G1/8" male - G1/4" female, Brass						**A5**
	Adapter G1/8" male - G1/4" female, Brass nickel plated						**B5**
	Adapter G1/8" male - G1/4" female, Stainless steel 1.4435						**D5**
	Damping elements and snubber see data sheet H72258						

[1] Switching differential not adjustable
[2] Not suitable for applications under vibration

Standard products (extra short lead time)

Product No.	Type Code	Pressure range [bar]	Differential pressure [bar]	Over pressure max. [bar]	Switching differential [bar]	Length X [mm]
PD3.4	920 2374 931	-1 ... +6	-0.6 ... +3.4	12	0.16 (fixed)	77
PD6	920 2377 933	-1 ... +8	0 ... 6	12	0.16 (fixed)	77
PD16	920 2379 935	-1 ... 18	1 ... 16	24	0.4 (fixed)	87

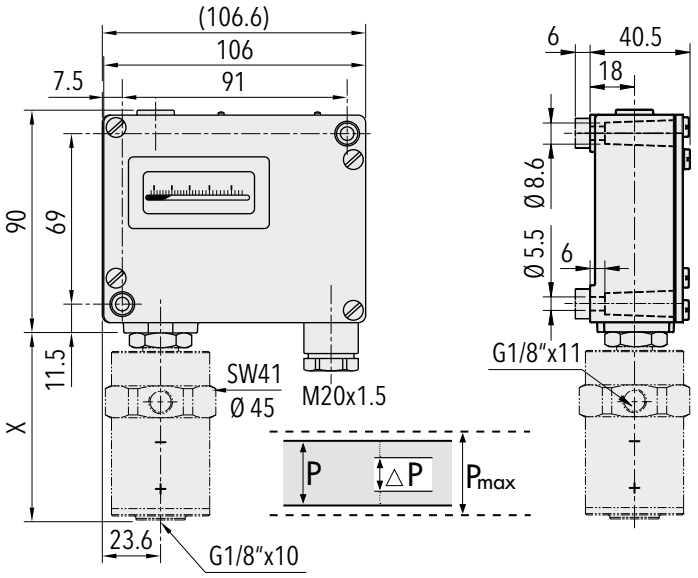

Specifications		
Accuracy	Repeatability	± 1.0 % FS typ.
	Scale accuracy typ.	± 2.0 % FS typ.
	Switching differential	See table
	Adjustment range switch point [1]	0 ... 100% Differential pressure
Environmental conditions	Ambient temperature	-25°C ... +70°C
	Media temperature	-40°C ... +150°C
	Storage temperature	-25°C ... +85°C
	Protection	IP65
	Humidity	Max. 95 % relative
	Vibration	Switch 23/26: 5...25 Hz: ±1.6 mm 25...100 Hz: 4 g
	Shock	50 g / 11 ms
Mechanical Data	Sensor	See ordering information
	Housing	AlSi10Mg/ Epoxy coated
	Sealing	NBR
	Screwed cable gland	Brass nickel plated
	Mounting torque	Max. 25 Nm
	Installation	any position
	Weight	~ 610 g
Microswitch	Rating	See table
	Resistance of insulation	> 2 MΩ
	Dielectric strength	U ≤ 250V: 1.45 kV/ U ≤ 500V: 2 kV terminal ground
	Life time (mechanical)	Microswitch 10/11: 20 Mio. cycles Microswitch 21: 0.5 Mio. cycles Microswitch 23/26: 0.3 Mio. cycles
Electrical connection	Electrical connections	Screw terminal
	Cable gland	M20x1.5 Cable-Ø 6...13 mm
	Terminal screw	3 x 1.5...4 mm²

[1] Other adjustment ranges upon request

Additional information		
Documents	Data sheet	www.trafag.com/H72253
	Instructions	www.trafag.com/H73256
	Flyer	www.trafag.com/H70914

Dimensions

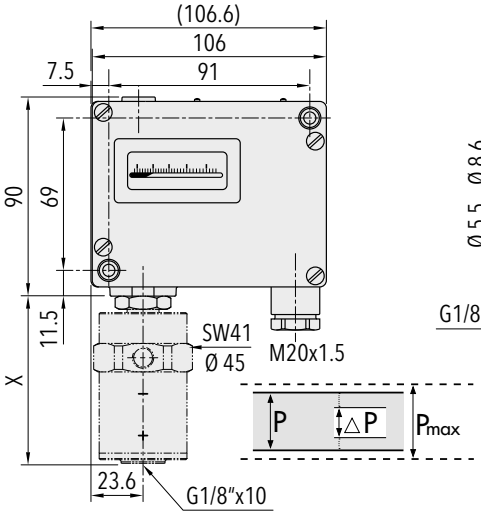

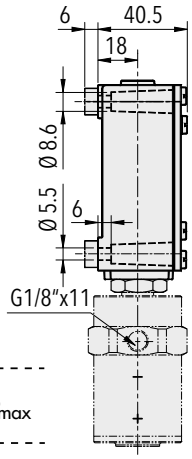

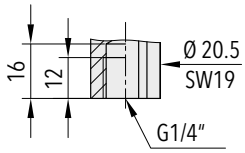

G1/4" female

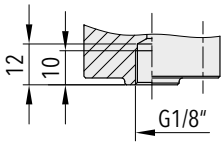

G1/8" female

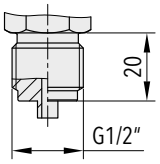

G1/2" male

Dimension X and Y see data sheet H72271

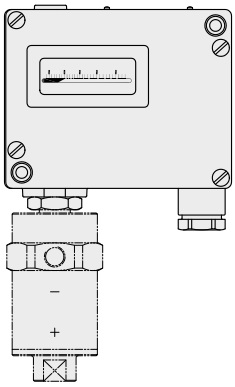

920.XX.XX.XXX.XX.XX

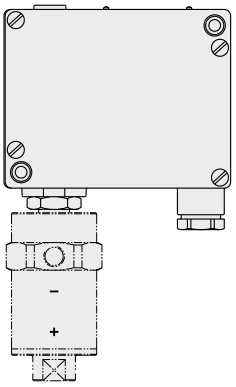

924.XX.XX.XXX.XX.XX

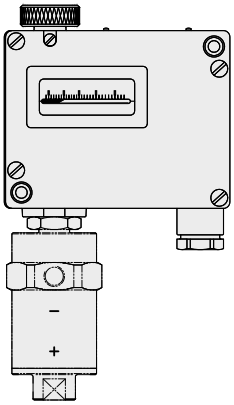

932.XX.XX.XXX.XX.XX

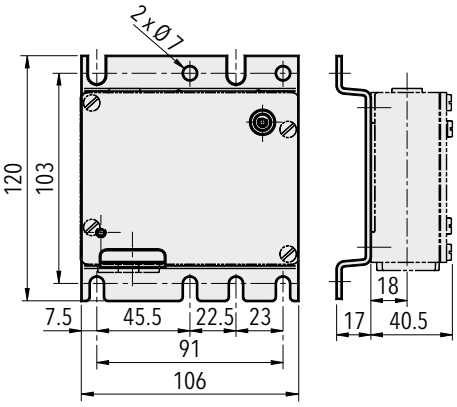

9XX.XX.XX.XXX.**31**.XX

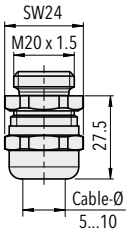

9XX.XX.XX.XXX.XX.**07**
M20x1.5

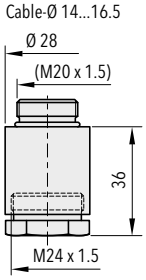

9XX.XX.XX.XXX.XX.**27**
M24x1.5

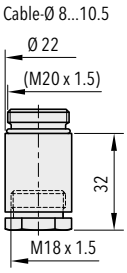

9XX.XX.XX.XXX.XX.**40**
M18x1.5

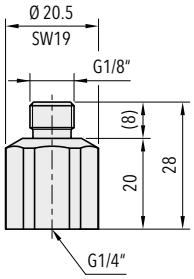

A5 / B5 / D5

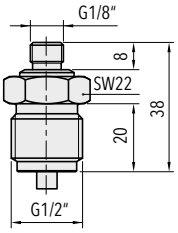

A6 / B6 / D6

Switching differential typ. @ 25°C			
Range of piston sensor	**[bar]**	**-1 ... 6** **-1 ... 8**	**-1 ... 12** **-1 ... 18**
Microswitch 10 Switching differential (not adjustable)	**[bar]**	0.08	0.2
Microswitch 11/21/23 Switching differential (not adjustable)	**[bar]**	0.16	0.4
Microswitch 26 Switching differential (not adjustable)	**[bar]**	0.25	0.5

Electrical data switch			
		Rating Resistive Load (Inductive Load)	
Type	**Features**	**AC**	**DC**
10	Small switching differential (not recommended for applications under vibrations)	125 V, 10 (1.5) A 250 V, 10 (1.25) A	250 V, 0.2 (0.02) A 125 V, 0.4 (0.03) A 30 V, 2 (1) A 14 V, 15 (2.5) A
11	Average switching differential, standard vibration resistance	125 V, 15 (1.5) A 250 V, 15 (1.25) A 500 V, 10 (0.75) A	250 V, 0.25 (0.03) A 125 V, 0.5 (0.05) A 30 V, 6 (1.5) A 14 V, 15 (1.5) A
23	Average switching differential, increased vibration resistance	125 V, 15 (1.5) A 250 V, 15 (1.25) A 500 V, 10 (0.75) A	250 V, 0.3 (0.05) A 125 V, 0.6 (0.1) A 30 V, 15 (1.5) A 14 V, 15 (1.5) A
26	Large switching differential, high vibration resistance	125 V, 15 (1.5) A 250 V, 15 (1.25) A 500 V, 10 (0.75) A	250 V, 0.3 (0.2) A 125 V, 0.75 (0.4) A 30 V, 15 (1.5) A 14 V, 15 (1.5) A
21	With gold plated contacts, standard vibration resistance	24 V, 0.1 (0.1) A 12 V, 1.0 (1.0) A 5 V, 2.0 (2.0) A	24 V, 0.1 (0.1) A 12 V, 1.0 (1.0) A 5 V, 2.0 (2.0) A

Electrical Connection

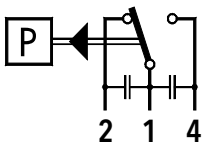

Switch 10/11/23

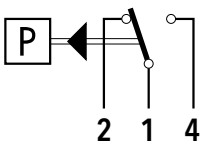

Switch 21/26

PRESSOSTAT

Swiss based Trafag is a leading international supplier of high quality sensors and monitoring instruments for measurement of pressure and temperature.

Applications

- Machine tools
- Medium voltage switchgear

Features

- Steel or bronze bellows
- Blade connector (IEC) 2.8 x 0.5 mm
- Compact design
- Adjustment in factory

Technical Data			
Measuring principle	Bellow	Repeatability	± 1.0 % FS typ.
Measuring range	-0.3 ... 1.3 to 1 ... 10 bar	Media temperature	-25°C ... +80°C
Output signal	1 or 2 floating change-over contacts (SPDT)	Ambient temperature	-25°C ... +70°C
Switching differential	Not adjustable	Approval / conformity	EN60730-1/ EN60730-2-6: Typ 2.B.H
Switching point	Adjustment in factory		

Subject to change

Ordering information/type code

		XXX	XX	XX	XXX	XX	XX	XX
Custom build code	1 Floating change-over contact (SPDT)	**987**						
	2 Floating change-over contacts (SPDT)	**988**						
Microswitch	Standard contacts, switching differential not adjustable		**42**					
	Gold plated contacts, switching differential not adjustable		**84**					

	Range [bar]	Over pressure [bar]	Burst pressure [bar]						
Range	-0.3 ... 1.3	-1 ... 4	10		**72**				
	0 ... 1.6	-1 ... 4	10		**73**				
	0 ... 2.5	-1 ... 4	10		**75**				
	0 ... 4	-1 ... 6	10		**76**				
	1 ... 10	-1 ... 15	15		**78**				

	Sensor material	Pressure connection	Range						
Sensor	Bellows: 1.4301 (AISI 304)	1.4301 (AISI 304), with groove for O-ring	73, 75			**847**			
	Bellows: 1.4301 (AISI 304)	1.4301 (AISI 304), with groove for O-ring	76			**846**			
	Bellows: Bronze (CuSn6)	Brass (CuZn39Pb3), without groove for O-ring	72, 73, 75			**947**			
	Bellows: Bronze (CuSn6)	Brass (CuZn39Pb3), without groove for O-ring	76			**946**			
	Bellows: Bronze (CuSn6)	Brass (CuZn39Pb3), without groove for O-ring	78			**945**			
	Bellows: Bronze (CuSn6)	Brass (CuZn39Pb3), with groove for O-ring	72, 73, 75			**949**			
	Bellows: Bronze (CuSn6)	Brass (CuZn39Pb3), with groove for O-ring	76			**948**			
	Bellows: Bronze (CuSn6)	Brass (CuZn39Pb3), with groove for O-ring	78			**939**			

Code number	Specified by Trafag					**XX**		
Fixing	Direct on sensor or housing						**00**	
Accessories	Blade receptacle (2.8 x 0.5 mm) and insulator for flat plugs (2 x 6 pcs.)							**09**
	Switchpoint fixed and sealed upon customer's request							**88**
	Switchpoint preset upon customer's request, no guarantee on switching accuracy							**83**
	Switchpoint adjustment switch I (lower switchpoint) and switch II (upper switchpoint) Please indicate for each switch when ordering: - Switchpoint [bar] - Increasing or decreasing							
	Routine test of leakage rate < 10^{-7} mbar·l/s							**05**
	Damping elements and snubber see data sheet H72258							

Specifications		
Accuracy	Repeatability	± 1.0 % FS typ.
	Switching differential	See table
	Adjustment range switchpoint [1)]	10% ... 90% FS
Environmental conditions	Ambient temperature	-25°C ... +70°C
	Media temperature	-25°C ... +80°C
	Storage temperature	-40°C ... +80°C
	Protection	IP40 (Microswitch IP67)
	Humidity	Max.95 % relative
	Vibration	5 ... 100 Hz: 2 g
	Shock	50g/ 11ms
Mechanical Data	Sensor	See ordering information
	Housing	PBTP, Crastin
	Sealing	-
	Mounting torque	Max. 25 Nm
	Installation	any position
	Weight	~ 110 g
Microswitch	Rating	See table
	Resistance of insulation	> 2 MΩ, 500 VDC
	Dielectric strength	2 kV terminal ground
	Life time (mechanical)	2 Mio. cycles
Electrical connection	Electrical connections	Blade connector
	Blade connector	IEC 2.8 x 0.5 mm 0.75...1 mm²

[1)] Pressure range 1 ... 10 bar: Max. 2 bar switchpoint difference between switch I and switch II
Other adjustment ranges upon request

Additional information		
Documents	Data sheet	www.trafag.com/H72272
	Instructions	www.trafag.com/H73272
	Flyer	www.trafag.com/H70915

Dimensions

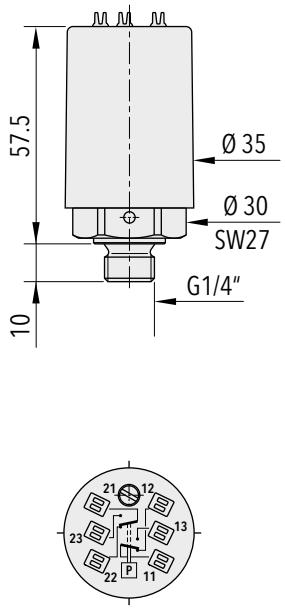

98X.XXXX.**945/946/947**

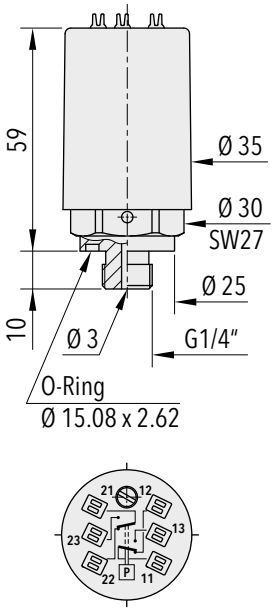

98X.XXXX.**939/948/949**

(O-Ring not included in delivery)

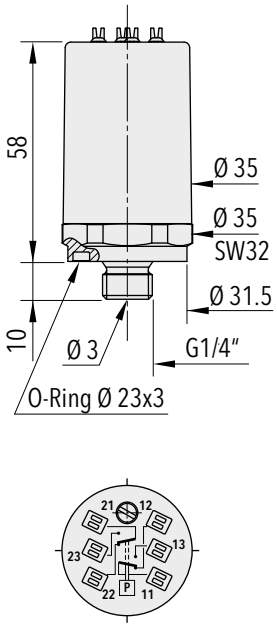

98X.XXXX.**846/847**

(O-Ring not included in delivery)

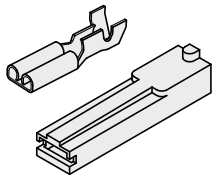

98X.XXXX.XXX.XX.XX.**09**

Switching differential typ. @ 25°C						
Measuring range of bellows sensor	**[bar]**	**-0.3 ... 1.3**	**0 ... 1.6**	**0 ... 2.5**	**0 ... 4**	**1 ... 10**
Microswitch 42/84 Switching differential (not adjustable)	**[bar]**	0.1	0.1	0.2	0.3	0.6
Tolerance of setting	**[bar]**	±0.08	±0.08	±0.12	±0.16	±0.2

Electrical data switch			
		Rating Resistive Load (Inductive Load)	
Type	**Features**	**AC**	**DC**
42 (Standard)	Silver contacts	250 V, 6 (1) A	220 V, 0.25 (0.1) A 110 V, 0.5 (0.2) A 60 V, 1(0.5) A 24 V, 3 (2) A 12 V, 6 (6) A
84	Gold plated contacts, suitable for intrinsically safe control circuits	max. 30 V, 0.1 (0.1) A min. 5 V, 5 mA	

Electrical connection

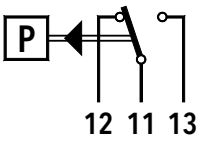

987

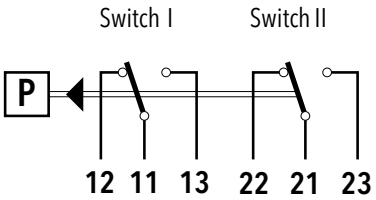

988

EX PRESSOSTAT

Swiss based Trafag is a leading international supplier of high quality sensors and monitoring instruments for measurement of pressure and temperature.

Applications

- Ex II 2G / D

Features

- Rugged aluminium housing, option: housing stainless steel
- Protection IP66
- Any mounting position possible
- Ex db eb IIC T6 Gb
- Ex tb IIIC T80°C Db

Technical Data			
Measuring principle	Bellow	Media temperature	-40°C ... +150°C
Measuring range	-0.9 ... 1.5 to 4 ... 40 bar	Ambient temperature	-50°C ... +65°C
Output signal	1 Floating change-over contact (SPDT)	Approval / conformity	SEV 15 ATEX 0157 X IECEx SEV 17.0013X
Switching differential	Not adjustable	Type of protection	Areas with gaz explosion hazards: II 2G Ex db eb IIC T6 Gb Areas with dust explosion hazards: II 2D Ex tb IIIC T80°C Db
Repeatability	± 1.0 % FS typ.		

Subject to change

Ordering information/type code

		XXX	XX	XX	XXX	XX	XX
Custom build code	With display and adjusting screw	**900**					
	Without display, with adjusting screw	**904**					
	With display and adjusting knob	**912**					
Microswitch	Standard, not adjustable		**91**				

Range

Range [bar]	Over pressure [bar]	Burst pressure [bar]		Range [bar]	Over pressure [bar]	Burst pressure [bar]	
-0.9 ... 1.5	10	13	**72**	1 ... 10	24	36	**78**
0.2 ... 1.6	10	13	**73**	1 ... 16	24	36	**79**
0.2 ... 2.5	10	13	**75**	2 ... 25	40	75	**80**
0 ... 4	12	26	**76**	4 ... 40	40	75	**81**
0 ... 6	12	26	**77**				

Sensor

Sensor material	Sensor housing material	Thread	Range		Sensor material	Sensor housing material	Thread	Range	
1.4435	Brass nickel plated	G1/4" female	72	**850**	1.4435	Brass nickel plated	G1/2" male	76, 77	**854**
1.4435	Brass nickel plated	G1/2" male	72	**859**	1.4435	Brass nickel plated	G1/4" female	78, 79	**855**
1.4435	Brass nickel plated	G1/4" female	73, 75	**851**	1.4435	Brass nickel plated	G1/2" male	78, 79	**856**
1.4435	Brass nickel plated	G1/2" male	73, 75	**852**	1.4435	Brass nickel plated	G1/4" female	80, 81	**857**
1.4435	Brass nickel plated	G1/4" female	76, 77	**853**	1.4435	Brass nickel plated	G1/2" male	80, 81	**858**

Fixing	Direct on sensor or housing	**00**	
	With mounting bracket	**31**	
Accessories	Housing stainless steel		**06**
	Damping elements and snubber see data sheet H72258		

Standard products (extra short lead time)

Product No.	Type Code	Pressure range [bar]	Over pressure max. [bar]	Switching differential [bar]	Diameter Y [mm]	Length X [mm]
EXP1.5	900 9172 850 00 0000 0000 02	-0.9 ... 1.5	10	0.2 (fixed)	45	56.5
EXP2.5	900 9175 851 00 0000 0000 02	0.2 ... 2.5	10	0.2 (fixed)	45	56.5
EXP6	900 9177 853 00 0000 0000 02	0 ... 6	12	0.4 (fixed)	33	47
EXP16	900 9179 855 00 0000 0000 02	1 ... 16	24	0.9 (fixed)	27	42.5

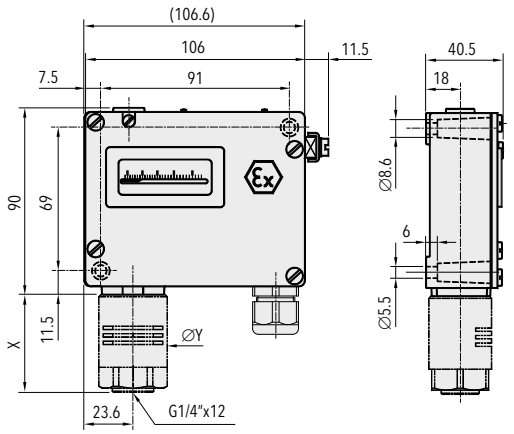

Specifications		
Accuracy	Repeatability	± 1.0 % FS typ.
	Scale accuracy typ.	± 2.0 % FS typ.
	Switching differential	See table
	Adjustment range switchpoint [1)]	10% ... 90% FS
Environmental conditions	Ambient temperature	-50°C ... +65°C
	Media temperature	-40°C ... +150°C
	Storage temperature	-50°C ... +65°C
	Protection	IP66 Accessory 06: IP66
	Humidity	Max.95 % relative
	Vibration	5...25 Hz: ±1.6 mm 25...100 Hz: 4g Ranges 72, 73, 75: 5...50 Hz: 20 mm/sec.
	Shock	50g/ 11ms
Mechanical Data	Sensor	See ordering information
	Housing	AlSi10Mg/ Epoxy coated Accessory 06: 1.4301 (AISI 304)
	Sealing	NBR
	Screwed cable gland	Polyamide
	Mounting torque	Max. 25 Nm
	Installation	any position
	Weight	~ 710 g
Microswitch	Rating	See table
	Resistance of insulation	> 2 MΩ
	Dielectric strength	1.5 kV
	Life time (mechanical)	1 Mio. cycles
Electrical connection	Electrical connections	Terminal screw
	Cable gland	M20x1.5/SW24 Cable-Ø 5.5-13 mm Approval: PTB 99 ATEX 3128 X
	Terminal screw	3 x 0.5...1.5 mm²

[1)] Other adjustment ranges upon request

Additional information		
Documents	Data sheet	www.trafag.com/H72263
	Instructions	www.trafag.com/H73171
	Flyer	www.trafag.com/H70916

Dimensions

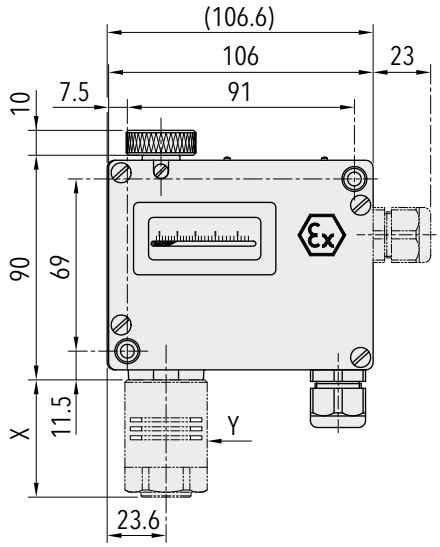

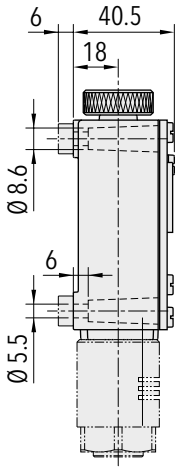

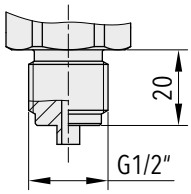

G1/2" male

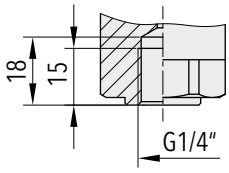

G1/4" female

Dimension X and Y see data sheet H72271

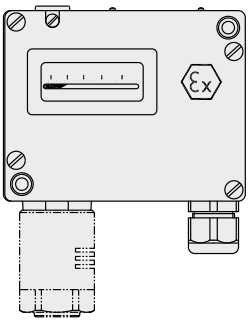

900

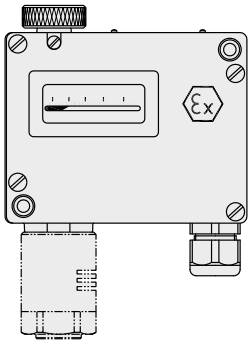

912

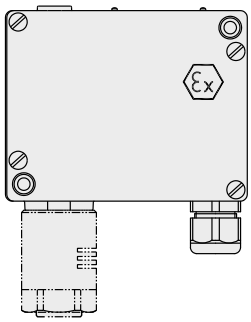

904

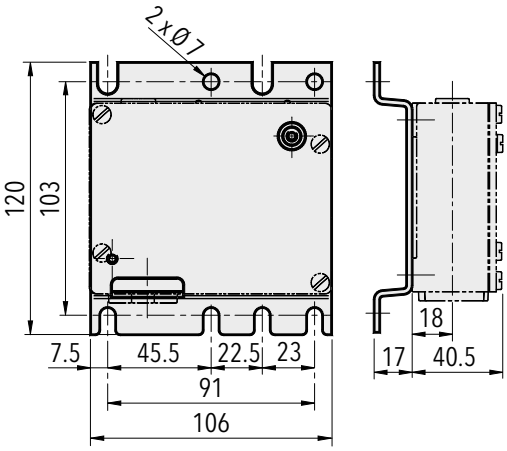

9XX.XXXX.XXX.**31**

Switching differential typ. @ 25°C					
Measuring range of bellows sensor	**[bar]**	-0.9 ... 1.5 0.2 ... 1.6 0.2 ... 2.5	0 ... 4 0 ... 6	1 ... 10 1 ... 16	2 ... 25 4 ... 40
Microswitch 91 Switching differential (not adjustable)	**[bar]**	0.2	0.4	0.9	2.0

Electrical data switch			
		Rating Resistive Load (Inductive Load)	
Type	**Features**	**AC**	**DC**
91	Standard Ex	250V 5(5) A 125V 5(5) A	250 V 0.25 (0.03) A 125 V 0.5 (0.06) A 75 V 0.75 (0.25) A 50 V 1 (1) A 30 V 5 (3) A 15 V 5 (3) A

Electrical connection

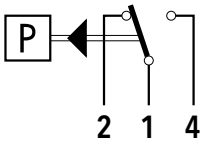

Switch **91**

EX PRESSOSTAT

Swiss based Trafag is a leading international supplier of high quality sensors and monitoring instruments for measurement of pressure and temperature.

Applications

- Ex II 2G / D

Features

- Rugged aluminium housing, option: housing stainless steel
- Protection IP66
- Any mounting position possible
- Ex db eb IIC T6 Gb
- Ex tb IIIC T80°C Db

Technical Data			
Measuring principle	Piston	Media temperature	NBR: -30°C ... +100°C FKM: -15°C ... +150°C
Measuring range	1 ... 10 to 60 ... 600 bar	Ambient temperature	-50°C ... +65°C
Output signal	1 Floating change-over contact (SPDT)	Approval / conformity	SEV 15 ATEX 0157 X IECEx SEV 17.0013X
Switching differential	Not adjustable	Type of protection	Areas with gas explosion hazards: II 2G Ex db eb IIC T6 Gb; Areas with dust explosion hazards: II 2D Ex tb IIIC T80°C Db
Repeatability	± 1.0 % FS typ.		

Subject to change

Ordering information/type code

		XXX	XX	XX	XXX	XX	XX
Custom build code	With display and adjusting screw	**944**					
	Without display, with adjusting screw	**947**					
	With display and adjusting knob	**953**					
Microswitch	Standard, switching differential not ajustable		**91**				

Range

Range [bar]	Over pressure [bar]	Burst pressure [bar]	
1 ... 10	100	200	**78**
4 ... 40	200	400	**81**
6 ... 60	200	400	**82**
10 ... 100	200	400	**83**
16 ... 160	400	600	**84**
25 ... 250	400	600	**85**
40 ... 400	800	1000	**86**
60 ... 600	800	1000	**87**

Sensor

Sensor material	Sensor housing material	Thread	Range	
Piston 1.4435, O-Ring NBR	1.4435	G1/4" female	78	**700**
Piston 1.4435, O-Ring NBR	1.4435	G1/2" male	78	**702**
Piston 1.4435, O-Ring FKM	1.4435	G1/4" female	78	**701**
Piston 1.4435, O-Ring FKM	1.4435	G1/2" male	78	**703**
Piston 1.4435, O-Ring NBR	1.4435	G1/4" female	81	**704**
Piston 1.4435, O-Ring NBR	1.4435	G1/2" male	81	**706**
Piston 1.4435, O-Ring FKM	1.4435	G1/4" female	81	**705**
Piston 1.4435, O-Ring FKM	1.4435	G1/2" male	81	**707**
Piston 1.4435, O-Ring NBR	1.4435	G1/4" female	82, 83	**708**
Piston 1.4435, O-Ring NBR	1.4435	G1/2" male	82, 83	**710**

Sensor material	Sensor housing material	Thread	Range	
Piston 1.4435, O-Ring FKM	1.4435	G1/4" female	82, 83	**709**
Piston 1.4435, O-Ring FKM	1.4435	G1/2" male	82, 83	**711**
Piston 1.4435, O-Ring NBR	1.4435	G1/4" female	84, 85	**712**
Piston 1.4435, O-Ring NBR	1.4435	G1/2" male	84, 85	**714**
Piston 1.4435, O-Ring FKM	1.4435	G1/4" female	84, 85	**713**
Piston 1.4435, O-Ring FKM	1.4435	G1/2" male	84, 85	**715**
Piston 1.4435, O-Ring NBR	1.4435	G1/4" female	86, 87	**722**
Piston 1.4435, O-Ring NBR	1.4435	G1/2" male	86, 87	**724**
Piston 1.4435, O-Ring FKM	1.4435	G1/4" female	86, 87	**723**
Piston 1.4435, O-Ring FKM	1.4435	G1/2" male	86, 87	**725**

Fixation	Direct on sensor or housing	**00**	
	With mounting bracket	**31**	
Accessories	Housing stainless steel		**06**
	Damping elements and snubber see data sheet H72258		

Standard products (extra short lead time)						
Product No.	**Type Code**	**Pressure range [bar]**	**Over pressure max. [bar]**	**Switching differential [bar]**	**Diameter Y [mm]**	**Length X [mm]**
EXPK10	944 9178 700 00 0000 0000 02	1 ... 10	100	0.4 ... 0.8 (fixed)	33	47
EXPK40	944 9181 704 00 0000 0000 02	4 ... 40	200	2 ... 5 (fixed)	27	42.5
EXPK100	944 9183 708 00 0000 0000 02	10 ... 100	200	4 ... 11 (fixed)	27	42.5
EXPK250	944 9185 712 00 0000 0000 02	25 ... 250	400	8 ... 26 (fixed)	27	42.5

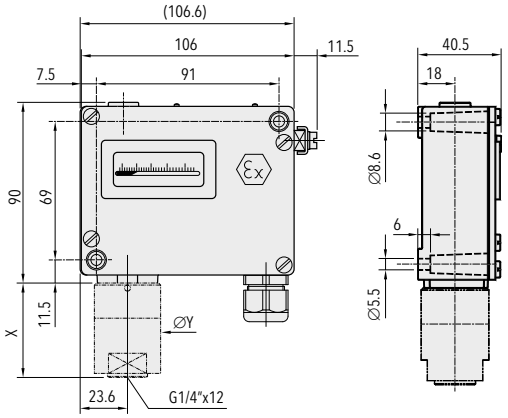

Specifications		
Accuracy	Repeatability	± 1.0 % FS typ.
	Scale accuracy typ.	± 2.0 % FS typ.
	Switching differential	See table
	Adjustment range switchpoint [1]	10% ... 90% FS
Environmental conditions	Ambient temperature	-50°C ... +65°C
	Media temperature	NBR: -30°C ... +100°C FKM: -15°C ... +150°C
	Storage temperature	-50°C ... +65°C
	Protection	IP66 Accessory 06: IP66
	Humidity	Max. 95 % relative
	Vibration	5...25 Hz: ±1.6 mm 25...100 Hz: 4g
	Shock	50g/ 11ms
Mechanical Data	Sensor	See ordering information
	Housing	AlSi10Mg/ Epoxy coated Accessory 06: 1.4301 (AISI 304)
	Sealing	NBR / FKM
	Screwed cable gland	Polyamide
	Mounting torque	Max. 25 Nm
	Installation	any position
	Weight	~ 710 g
Microswitch	Rating	See table
	Resistance of insulation	> 2 MΩ
	Dielectric strength	1.5 kV
	Life time (mechanical)	1 Mio. cycles
Electrical connection	Electrical connections	Terminal screw
	Cable gland	M20x1.5/SW24 Cable-Ø 5.5...13 mm Approval: PTB 99 ATEX 3128 X
	Terminal screw	3 x 0.5...1.5 mm²

[1] Other adjustment ranges upon request

Additional information		
Documents	Data sheet	www.trafag.com/H72270
	Instructions	www.trafag.com/H73171
	Flyer	www.trafag.com/H70917

Dimensions

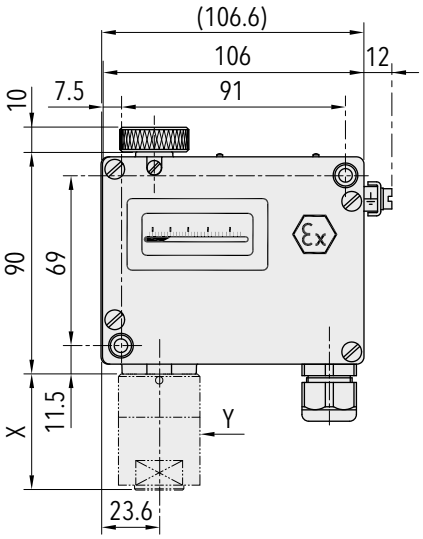

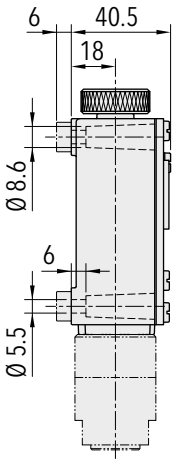

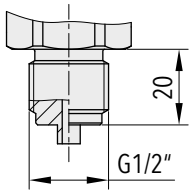

G1/2" male

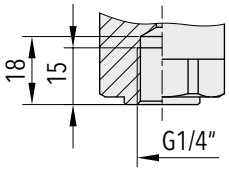

G1/4" female

Dimension X and Y see data sheet H72271

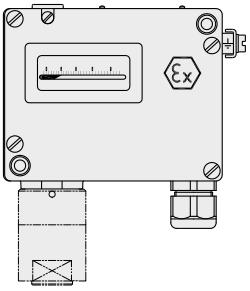

944

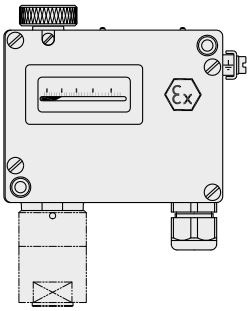

953

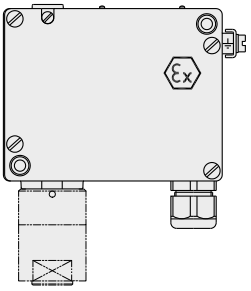

947

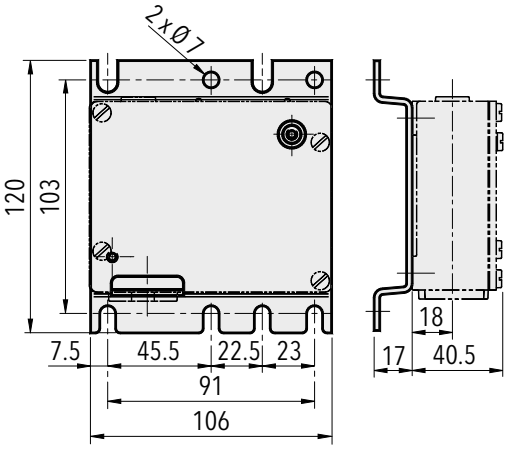

9XX.XXXX.XXX.**31**

Switching differential typ. @ 25°C					
Measuring range of piston sensor	**[bar]**	1 ... 10	4 ... 40	6 ... 60	10 ... 100
Microswitch 91 Switching differential: Variable according to set point (not adjustable)	**[bar]**	0.4 ... 0.8	2 ... 5	3 ... 8	4 ... 11
Measuring range of piston sensor	**[bar]**	16 ... 160	25 ... 250	40 ... 400	60 ... 600
Microswitch 91 Switching differential: Variable according to set point (not adjustable)	**[bar]**	6 ... 18	8 ... 26	14 ... 42	24 ... 65

Electrical data switch			
		Rating Resistive Load (Inductive Load)	
Type	**Features**	**AC**	**DC**
91	Standard Ex	250V 5(5) A 125V 5(5) A	250 V 0.25 (0.03) A 125 V 0.5 (0.06) A 75 V 0.75 (0.25) A 50 V 1 (1) A 30 V 5 (3) A 15 V 5 (3) A

Electrical connection

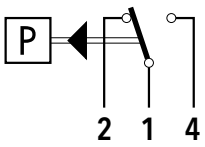

Switch **91**

EX DIFFERENTIAL PRESSOSTAT

Swiss based Trafag is a leading international supplier of high quality sensors and monitoring instruments for measurement of pressure and temperature.

Applications

- Ex II 2G / D

Features

- Rugged aluminium housing
- Protection IP66
- Ex db eb IIC T6 Gb
- Ex tb IIIC T80°C Db
- Any mounting position possible

Technical Data			
Measuring principle	Bellow	Repeatability	± 1.0 % FS typ.
Measuring range	-1 ... 6 to -1 ... 18 bar	Media temperature	-50°C ... +150°C
Differential pressure	-0.6 ... 3.4 to1 ... 16 bar	Ambient temperature	-50°C ... +65°C
Output signal	1 Floating change-over contact (SPDT)	Approval / conformity	SEV 15 ATEX 0157 X IECEx SEV 17.0013X
Switching differential	Not adjustable	Type of protection	Areas with gas explosion hazards: II 2G Ex db eb IIC T6 Gb; Areas with dust explosion hazards: II 2D Ex tb IIIC T80°C Db

Subject to change

Ordering information/type code

		XXX	XX	XX	XXX	XX	XX
Custom build code	With display and adjusting screw	920					
	Without display, with adjusting screw	924					
	With display and adjusting knob	932					
Microswitch	Standard, not adjustable		91				

Range

Range [bar]	Differential pressure [bar]	Over pressure [bar]	Burst pressure [bar]	
-1 ... 6	-0.6 ... 3.4	12	26	74
-1 ... 6	0 ... 4	12	26	76
-1 ... 8	0 ... 6	12	26	77
-1 ... 12	1 ... 10	24	36	78
-1 ... 18	1 ... 16	24	36	79

Sensor

Sensor material	Sensor housing material	Thread	Range	
1.4435	Brass nickel plated	G1/8" female	74	881
1.4435	Brass nickel plated	G1/8" female	76, 77	883
1.4435	Brass nickel plated	G1/8" female	78, 79	885
Bronze	Brass	G1/8" female	74	942
Bronze	Brass	G1/8" female	76, 77	943
Bronze	Brass	G1/8" female	78, 79	944
Bronze	Brass nickel plated	G1/8" female	74	992
Bronze	Brass nickel plated	G1/8" female	76, 77	993
Bronze	Brass nickel plated	G1/8" female	78, 79	994

Fixing	Direct on sensor or housing	00	
	With mounting bracket	31	
Accessories	Adapter G1/8" male - G1/2" male, brass		A6
	Adapter G1/8" male - G1/2" male, brass nickel plated		B6
	Adapter G1/8" male - G1/2" male, stainless steel 1.4435		D6
	Adapter G1/8" male - G1/4" female, brass		A5
	Adapter G1/8" male - G1/4" female, brass nickel plated		B5
	Adapter G1/8" male - G1/4" female, stainless steel 1.4435		D5
	Damping elements and snubber see data sheet H72258		

Standard products (extra short lead time)

Product No.	Type Code	Pressure range [bar]	Differential pressure [bar]	Over pressure max. [bar]	Switching differential [bar]	Length X [mm]
EXPD3.4	920 9174 992 00 0000 0000 02	-1 ... +6	-0.6 ... +3.4	12	0.4 (fixed)	77
EXPD6	920 9177 993 00 0000 0000 02	-1 ... +8	0 ... 6	12	0.4 (fixed)	77
EXPD16	920 9179 994 00 0000 0000 02	-1 ... +18	1 ... 16	24	0.7 (fixed)	87

Specifications		
Accuracy	Repeatability	± 1.0 % FS typ.
	Scale accuracy typ.	± 2.0 % FS typ.
	Switching differential	See table
	Adjustment range switchpoint [1)]	10% ... 90% FS
Environmental conditions	Ambient temperature	-50°C ... +65°C
	Media temperature	-50°C ... +150°C
	Storage temperature	-50°C ... +65°C
	Protection	IP66
	Humidity	Max. 95 % relative
	Vibration	5...25 Hz: ±1.6 mm 25...100 Hz: 4g
	Shock	50g/ 11ms
Mechanical Data	Sensor	See ordering information
	Housing	AlSi10Mg/ Epoxy coated
	Sealing	NBR
	Screwed cable gland	Polyamide
	Mounting torque	Max. 25 Nm
	Installation	any position
	Weight	~ 610 g
Microswitch	Rating	See table
	Resistance of insulation	> 2 MΩ
	Dielectric strength	1.5 kV
	Life time (mechanical)	1 Mio. cycles
Electrical connection	Electrical connections	Terminal screw
	Cable gland	M20x1.5/SW24 Cable-Ø 5.5...13 mm Approval: PTB 99 ATEX 3128 X
	Terminal screw	3 x 0.5...1.5 mm²

[1)] Other adjustment ranges upon request

Dimensions

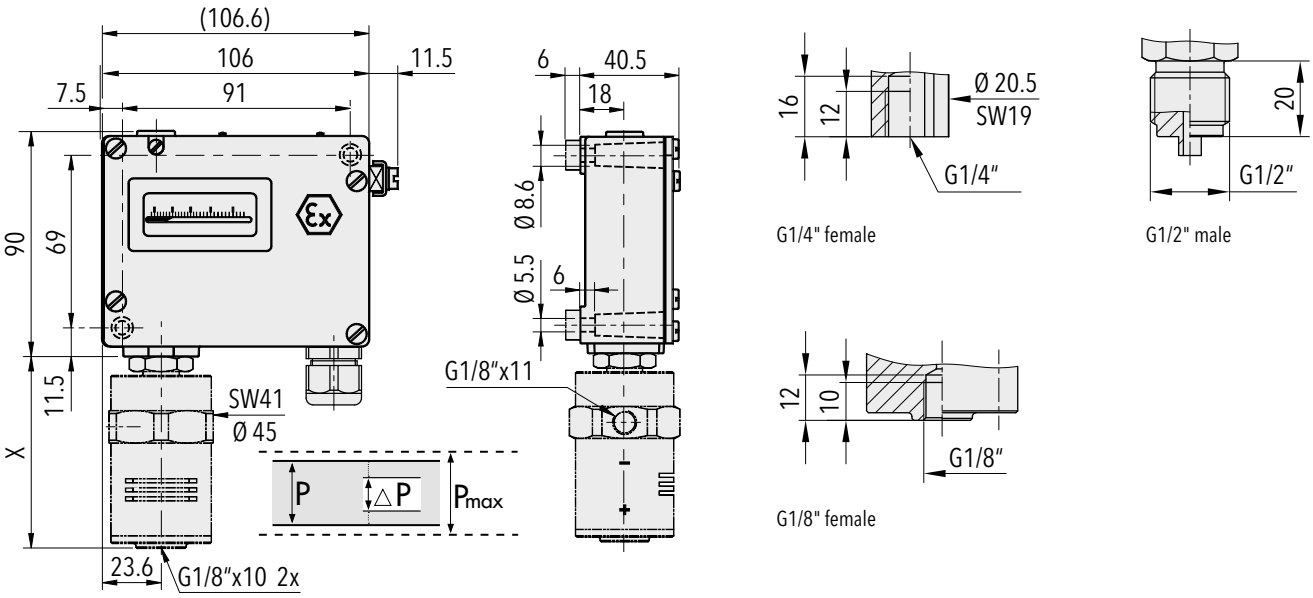

Dimension X see data sheet H72271

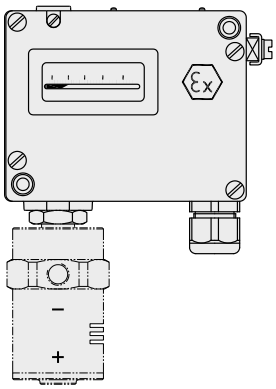

920

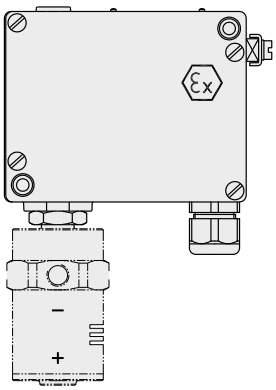

924

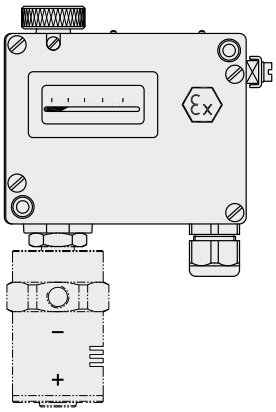

932

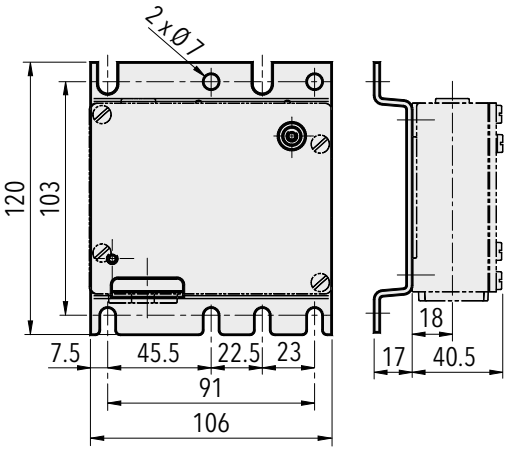

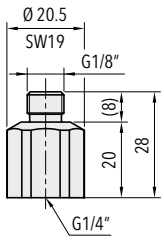

A5/B5/D5

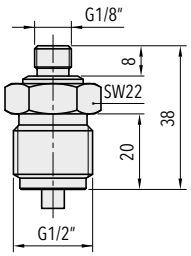

A6/B6/D6

9XX.XX.XX.XXX.**31**.XX

Switching differential typ. @ 25°C			
Measuring range of bellows sensor	**[bar]**	-0.6 ... 3.4 0 ... 4 0 ... 6	1 ... 10 1 ... 16
Microswitch 91 Switching differential (not adjustable)	**[bar]**	0.4	0.9

Electrical data switch			
		Rating Resistive Load (Inductive Load)	
Type	**Features**	**AC**	**DC**
91	Standard Ex	250V 5(5) A 125V 5(5) A	250 V 0.25 (0.03) A 125 V 0.5 (0.06) A 75 V 0.75 (0.25) A 50 V 1 (1) A 30 V 5 (3) A 15 V 5 (3) A

Electrical connection

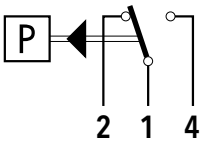

Switch 91

Additional information		
Documents	Data sheet	www.trafag.com/H72256
	Instructions	www.trafag.com/H73171
	Flyer	www.trafag.com/H70922

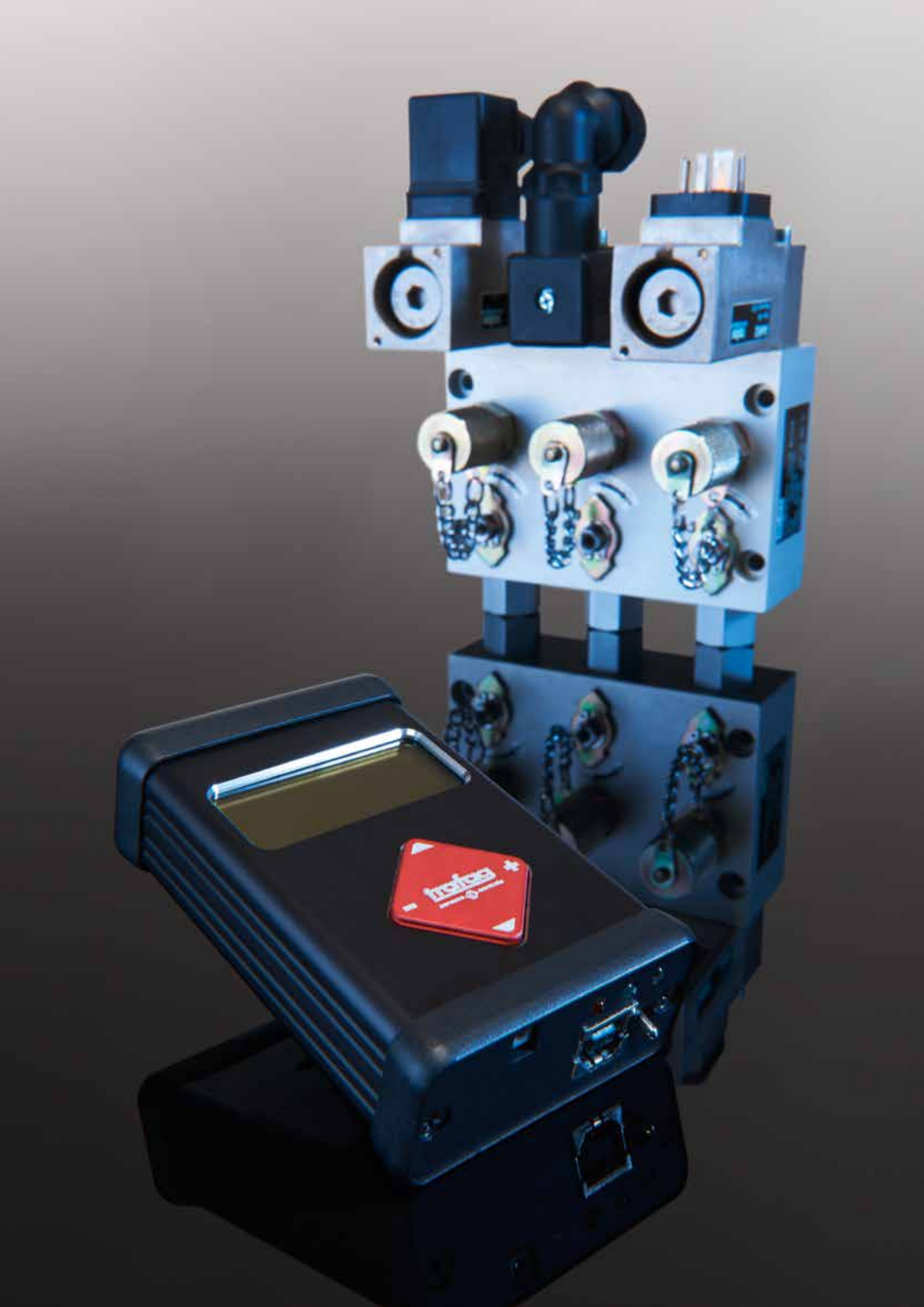

Accessories for electromechanical pressure switches

Trafag offers a wide range of original accessories which are ideally matched to our products. These include devices for monitoring or configuring transmitters such as hand pumps with precision pressure gauge or the Sensor Communicator, a handheld device which provides direct access to the calibration values of the transmitter in the Trafag ASIC. Trafag also offers a wide range of accessories that meet specific application requirements and make installation easier, such as diagnostic valve manifolds, snubbers and pressure peak damping elements. For thermostats various protective pipes are available.

Accessories for electromechanical pressure switches

- DVB Diagnostic valve block
- Hand pump with precision manometer
- Switch amplifier
- Adapters with manometer pressure ports
- Snubber
- Mounting plate
- Screwed cable gland

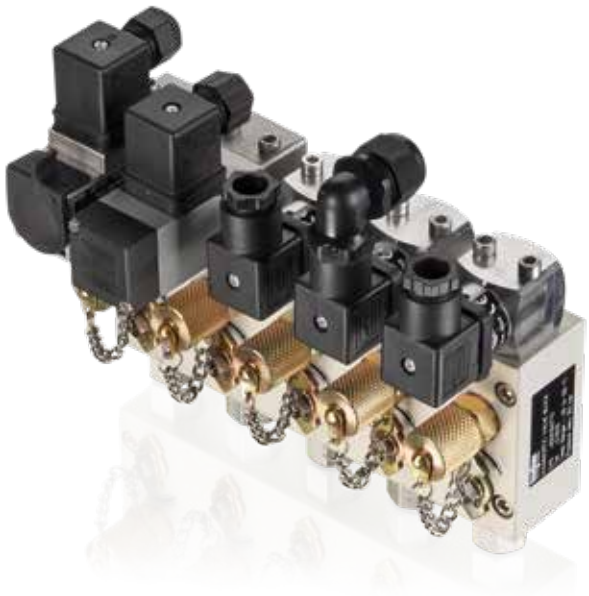

DVB

Diagnostic Valve Block

Features

- Function tests during operation (no interruption necessary) with stop valve and test connection

Technical Data	
Pressure	-0.8 ... 100 bar
Ambient temperature	-20°C ... +120°C

Data sheet www.trafag.com/H72361
Instruction www.trafag.com/H73361

Standard products (extra short lead time)

Product No		Material	Product No		Material
DVB11	1 P-in, 1 test connection, 1 P-out	Al, PEEK, FPM	DVB24	1 P-in, 4 test connection, 4 P-out	Al, PEEK, FPM
DVB12	2 P-in, 2 test connection, 2 P-out	Al, PEEK, FPM	DVB25	1 P-in, 5 test connection, 5 P-out	Al, PEEK, FPM
DVB13	3 P-in, 3 test connection, 3 P-out	Al, PEEK, FPM	DVB32	1 P-in, 1 test connection, 2 P-out	Al, PEEK, FPM
DVB14	4 P-in, 4 test connection, 4 P-out	Al, PEEK, FPM	DVB33	1 P-in, 1 test connection, 3 P-out	Al, PEEK, FPM
DVB15	5 P-in, 5 test connection, 5 P-out	Al, PEEK, FPM	DVB34	1 P-in, 1 test connection, 4 P-out	Al, PEEK, FPM
DVB22	1 P-in, 2 test connection, 2 P-out	Al, PEEK, FPM	DVB35	1 P-in, 1 test connection, 5 P-out	Al, PEEK, FPM
DVB23	1 P-in, 3 test connection, 3 P-out	Al, PEEK, FPM			

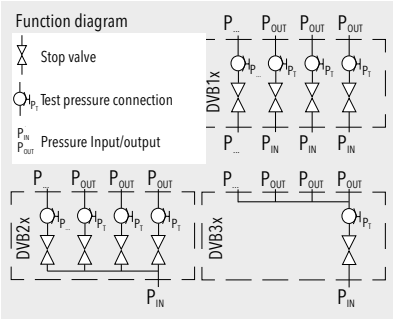

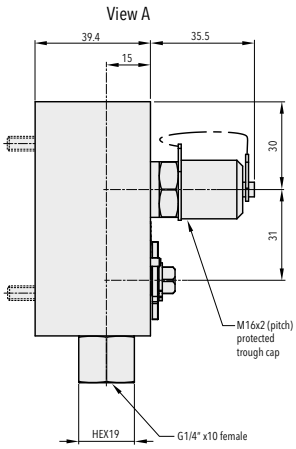

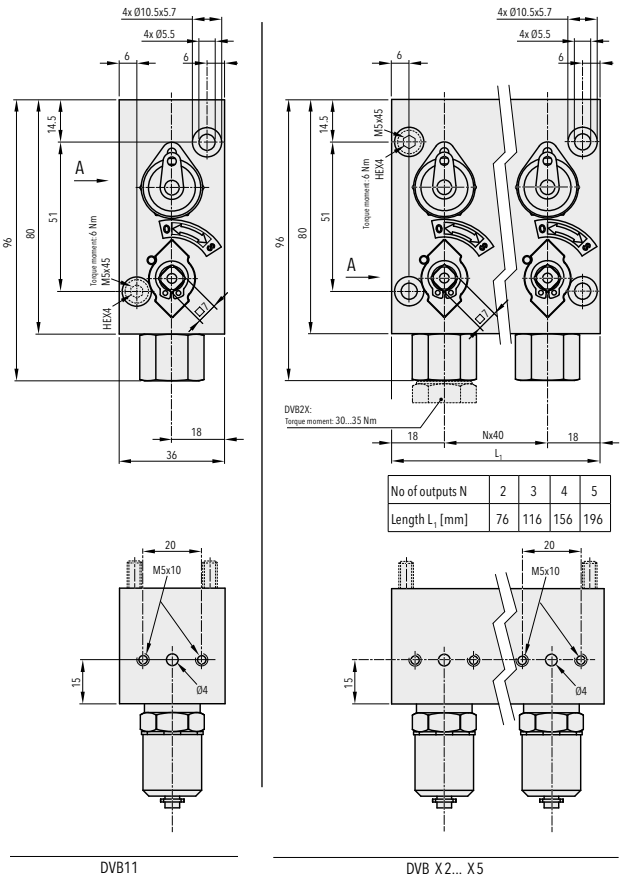

No of outputs N	2	3	4	5
Length L_1 [mm]	76	116	156	196

THP...

Hand pump

Features

- For testing of pressure transmitters and pressure switches

Technical Data	
Connection	G1/4" female

Standard products (extra short lead time)		
Product No	**Range [bar]**	
THP30	-0.85 ... +25	
THP700	0 ... 700	Resolution 0.2 bar

ZEN...

Switch amplifier

Features

- Ⓔx II 1 G Ex ia IIC Ga
- Ⓔx II 1 D Ex ia IIIC Da
- Ⓔx I M1 Ex ia I Ma
- IP 20
- Output: Signal, relays

Technical Data	
Ambient temperature	-20°C ... +60°C

The switch amplifier transfers digital signals from the hazardous area. Sensors per DIN EN 60947-5-6 (NAMUR) and mechanical contacts may be used as alarms.The control circuit is monitored for lead breakage (LB).

Standard products (extra short lead time)		
Product No	**Connection**	
ZEN24VDC	20 … 30 VDC, 20 … 23 mA	U_0 = 10.5 V, I_0 = 13 mA, P_0 = 34 mW
ZEN230VAC	207 … 253 VAC, 45 … 65 Hz	U_0 = 10.6 V, I_0 = 19.1 mA, P_0 = 51 mW
ZEN28VDC	Max. 28 VDC	U_0 = 28 V, I_0 = 93 mA, P_0 = 650 mW

A.../D...

Adapters with manometer pressure ports

Features

- Pressure adapters with different thread combinations and materials for individual applications

Technical Data	
Material	1.4435 (AISI316L) / Brass
Connection	G1/4"m - G1/2"m, G1/4"m - G3/8"m, G1/4"f - G1/2"m

Data sheet www.trafag.com/H72258

Standard products (extra short lead time)		
Product No		**Material**
A1	G1/4" male - G3/8" male manometer	Brass
A2	G1/4" male - G1/2" male manometer	Brass
D1	G1/4" male - G3/8" male manometer	1.4435 (AISI316L)
D2	G1/4" male - G1/2" male manometer	1.4435 (AISI316L)
D4	G1/4" female - G1/2" male manometer	1.4435 (AISI316L)

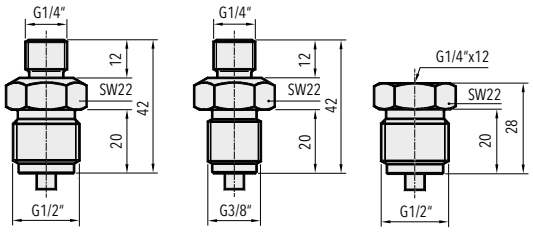

A2/D2 A1/D1 D4

K.../F...

Snubber

K3/K4/K5
F3/F4/F5

K1/K2

Features

- Integrated in an adapter
- K1/K2: Pressure peak damping element integrated in an adapter

Technical Data	
Material	1.4435/316L, brass
Connection	G1/4" male - female, G1/8" male - female

Data sheet www.trafag.com/H72258

Standard products (extra short lead time)			
Product No		**Connection**	**Material**
F3	Snubber for heavy oil	G1/4" male - female	Brass
F4	Snubber for light oil	G1/4" male - female	Brass
F5	Snubber for water/air	G1/4" male - female	Brass
K1	Snubber for water/air/light oil	G1/4" male - female	1.4435 (AISI316L)
K2	Snubber for water/air/light oil	G1/8" male - female	1.4435 (AISI316L)
K3	Snubber for heavy oil	G1/4" male - female	1.4435 (AISI316L)
K4	Snubber for light oil	G1/4" male - female	1.4435 (AISI316L)
K5	Snubber for water/air	G1/4" male - female	1.4435 (AISI316L)

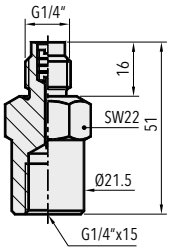

K3/K4/K5
F3/F4/F5

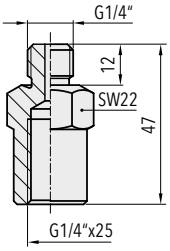

K1

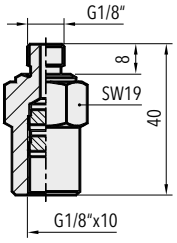

K2

trafag sensors controls

MB31

Mounting Plate

Features

- For pressure transmitters and pressure switches

Technical Data	
Material	Steel galvanised

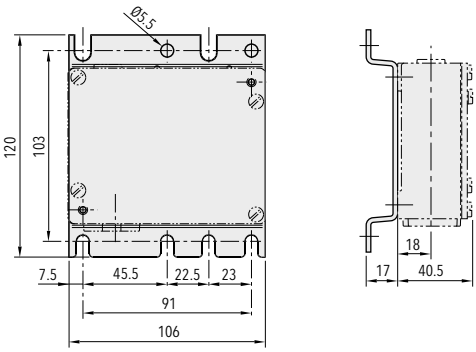

Standard products (extra short lead time)		
Product No.	**Suitable for type**	**Material**
MB31	N, ND, P, PS, PV, PD, PK, PVF, EXP, EXPK, EXPD	Steel galvanised

CG

Screwed cable gland

Features

- DIN 8280 for shipbuilding
- Retrofit for pressure transmitters, pressure switches and thermostats

Technical Data	
Material	Brass
Connection	M18x1.5, M24x1.5
Cable	Ø 10.5 mm, 16.5 mm

Standard products (extra short lead time)		
Product No.		**Material**
CG18	M18x1.5 for 8 ... 10.5 mm cable diameter	Brass
CG24	M24x1.5 for 14 ... 16.5 mm cable diameter	Brass

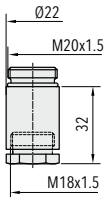

CG18

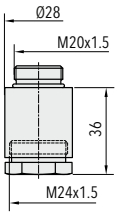

CG24

Terminology for pressure measurement instruments

Relevant standards
DIN 16086, IEC 61298-2

Instrument types

Pressure sensors
Membranes with elements applied whose physical properties change when the membranes deform (strain gauges with changing resistance, for example).

Pressure transmitters
Transmitters for converting the pressure to be measured into a defined or standardised analogue and/or digital output signal.

Pressure transducers
Pressure sensors that have a process connection and electrical connection (e.g. connector) but do not convert pressure into a standardised electrical signal like a pressure transmitter.

Types of pressure measurement

Differential pressure measurement
The measurement of differential pressure of two different pressures. The measuring instrument has two pressure connections.

Absolute pressure measurement
The measuring result is always the deviation to the absolute zero (vacuum).
e.g. 4 mA = 0 bar (= vacuum); zero point (ZP): 0 bar

Relative pressure measurement DIN 16086: overpressure
The measuring result is always the deviation to the current, absolute atmospheric pressure.
e.g. 4 mA = 960 mbar (= atmospheric pressure); zero point (ZP): 0 bar

Relative pressure measurement

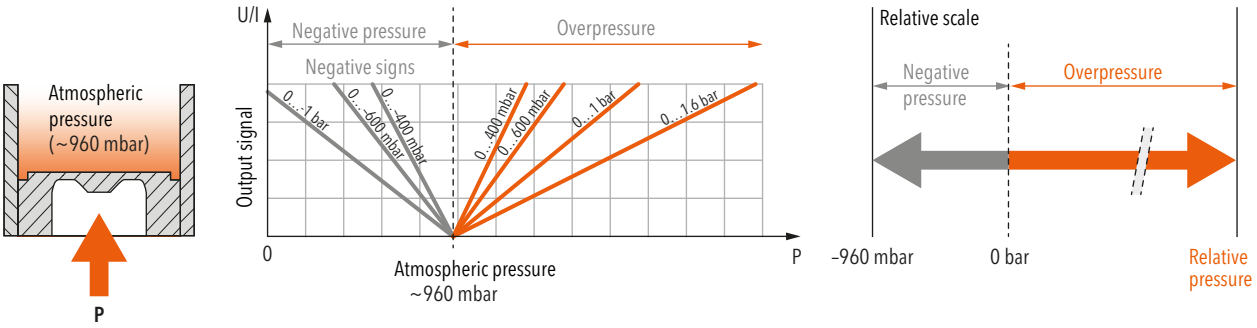

Absolute pressure measurement

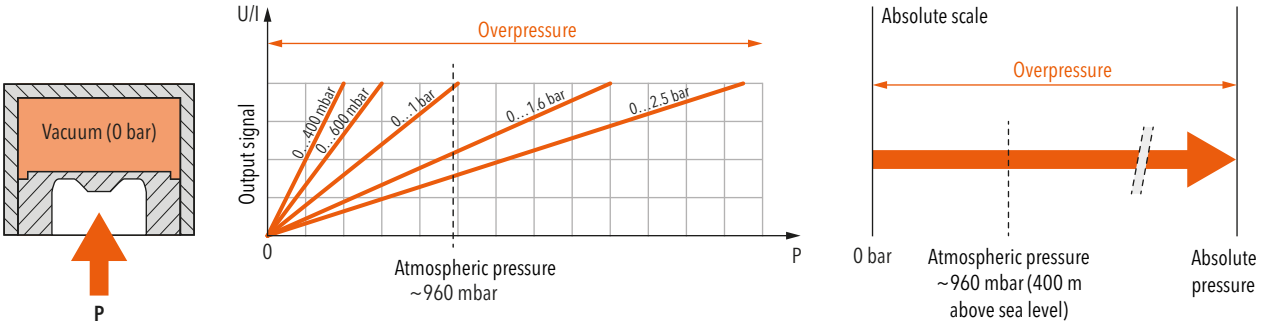

Terminology for pressure measurement instruments

Main features

Nominal pressure measuring range
Range between the upper and lower limits of the size measured (operating pressure). The specified accuracy remains within this range.

Measuring span
Algebraic difference between the upper and lower limit values of a certain measuring range.

Overpressure Max. working pressure
Highest pressure specified by manufacturer for which the pressure transformer is designed at maximum temperature. The pressure transformer can be loaded up to this pressure without the guaranteed metrological properties having changed after going back into the measuring range. However, there is no longer a clear link between pressure and output signal in the range between nominal pressure and overpressure.

Burst pressure
Pressure value (static) at which the measuring instrument suffers permanent damage. The instrument can withstand pressures up to this value without bursting and will not leak any measuring medium.

Example

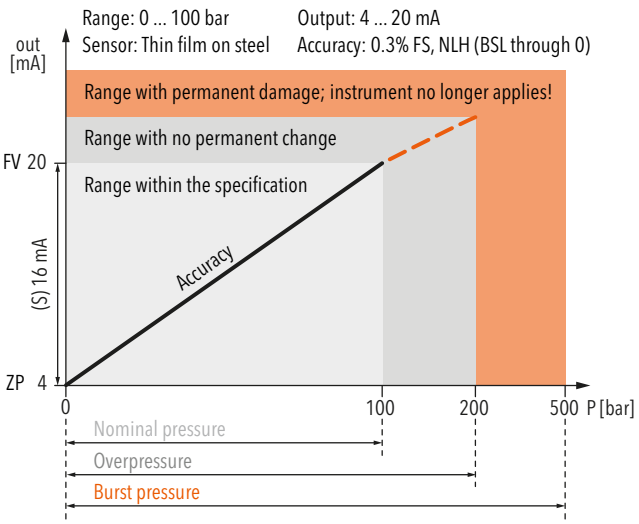

Accuracy

Typ. accuracy
(Typical) Mostly corresponds to the 1-sigma value of the normal distribution, i.e. approx. 68.3%. Generally, well over 75% of all Trafag instruments meet this typical measured value.

Max. accuracy
(maximum) 100% of all instruments meet this maximum measured value.

Non-linearity
The largest deviation from the effective characteristic line of an ideal reference line. The reference line can be defined as a limit point adjustment, a BSL or a BSL through 0.

Specifications: Non-linearity, Hysteresis

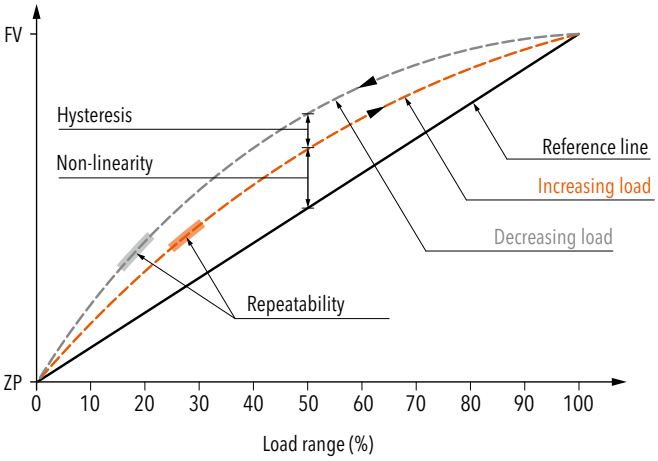

BSL Best Straight Line
The reference line according to the BSL or the minimum value adjustment is placed in such a way that the maximum positive and negative deviations are as small as possible.

Specifications: Accuracy NLH (BSL)

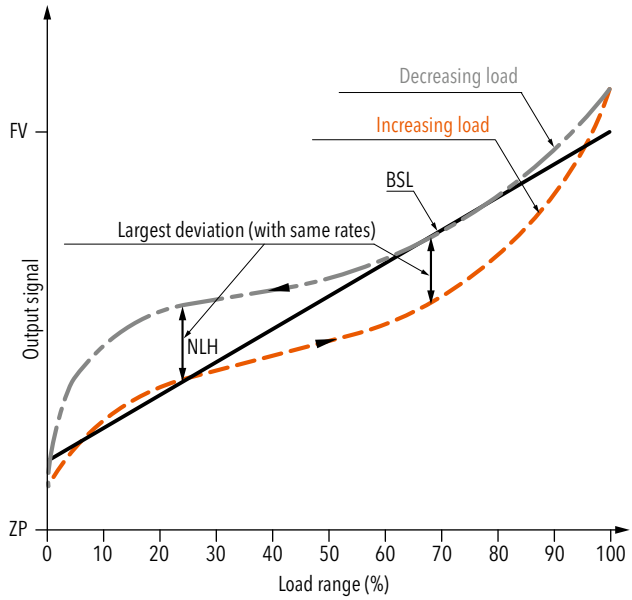

Terminology for pressure measurement instruments

BSL through zero
As an additional requirement for the minimum value adjustment, the BSL through zero (also BSL/0) must go straight through zero or the origin.

Specifications: Accuracy NLH (BSL through zero)

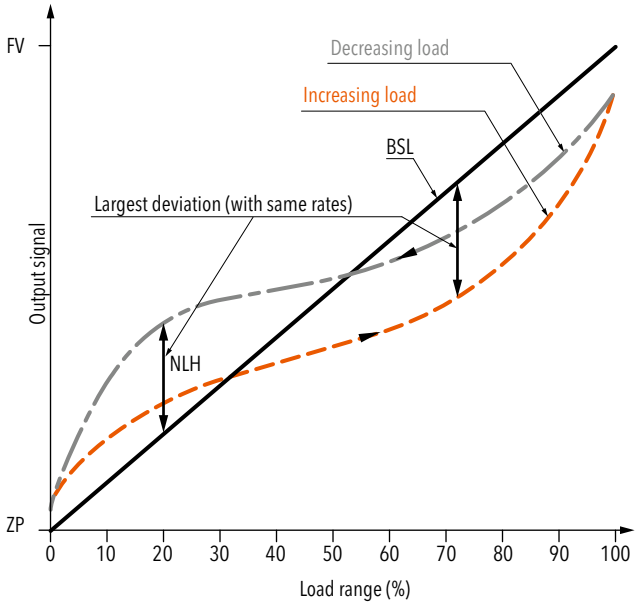

Non-linearity according to limit point adjustment
The reference line runs through the origin and end point of the characteristic line. Non-linearity indicates the greatest deviations from this line.

Hysteresis
Property of an instrument for yielding different output values in relation to its input values, which are dependent on the effective direction in which the input values are created (acc. to IEC 61298-2).

Pressure hysteresis
The difference that occurs at the same pressure between measurements in the direction of increasing and then decreasing pressure.

Temperature hysteresis
Maximum change of the zero point and output span for the pressure signal after specified temperature cycle over the operating temperature range.

NLH non-linearity and hysteresis
Largest deviation from the ideal characteristic line (BSL, BSL/0 or limit point). In pressure measuring instruments, the non-linearity and pressure hysteresis are given together at a constant temperature.

Accuracy DIN 16086: Measurement deviation
The accuracy denoted in the standard DIN 16086 with measurement deviation (at 25°C reference temperature) includes all deviations as a result of non-linearity, hysteresis, non-repeatability, zero point (start of measuring range) errors and span (end of measuring range) errors. Zero point errors and span errors also include the measuring uncertainty of the configuration ensemble.

Repeatability DIN 16086: Non-repeatability
Deviation of the output signals with same input signals under identical (established) application conditions.

Temperature coefficient TC
Change of measured value for zero point and span as a result of changes in temperature.

Long-term stability Long-term drift
The change of accuracy due to aging under certain reference conditions during a certain period of time, typically 1 year.

TEB Total error band
Total error (root from sum of the square of the deviations) due to measurement deviations (accuracy) and temperature influence (temperature coefficient TC). The temperature influence is usually given in the information from Trafag across a range larger than that given in the standard (-10 ... +60 °C). Whilst DIN 16086 also continues to add to the long-term stability over a year, the information from Trafag is subject to ex-works conditions for obvious reasons.

Scale accuracy
For pressostats: Deviation arising from the manual switch point adjustment with the help of the display (scale).

Electrical Data

Output signal
Electrical signal that emits the value of the measurement size for further processing

Rise time Step response
The time it takes for an output signal after a severe pressure change to increase from 10% to 90% of its final value that results from the change in pressure.

Zero point ZP
Output signal in the pressureless state (P_{min}), e.g. 4 mA at 0 bar (P_{min}).

Terminology for pressure measurement instruments

Final value FV
Output value of the largest pressure value in the nominal pressure range (P_{max}), e.g. 20 mA at 100 bar (P_{max}).

Span S
Final value (FV) – zero point (ZP) = span (S)
e.g. span (S) = (FV) 20 mA - (ZP) 4 mA = 16 mA

Switching differential Pressostats
Range within which the micro-switch in pressostats switches on and off
Example:
X...X = adjustable value
X - X = non-adjustable value; runs proportional to the nominal pressure
X = fixed value

Limiter Pressostats
Pressostat with manual micro-switch reset.

Environmental conditions

Media temperature
Permissible temperature range of the measuring media.

Operating temperature Ambient temperature
Temperature range in which the measuring instrument adheres to its specifications. As the electronics in certain instruments are more sensitive to temperature than the sensor element, the maximum ambient temperature for the instrument is lower than the permissible media temperature.

Storage temperature
Temperature range in which the measuring instrument can be stored or transported without permanently changing the measuring characteristics.

Protection
Humidity and dust shield according to IP classes in accordance with EN 60529.

EMC Protection

EMC Electromagnetic compatibility
Instrument property for functioning in an environment with electromagnetic interference and for not unduly influencing this environment (to which other equipment also belongs).

Immission
Immunity to external electromagnetic disturbances.

Emission
Interference emission from electromagnetic disturbances.

Surge
Immunity to unipolar surge voltages that can occur due to surges as a result of switching operation and lighting.

Burst
Immunity to recurring, rapid, transient electrical disturbances.

Information about Ex products

Trafag draws from decades of experience in the design and manufacturing of pressure and temperature measuring instruments for hazardous area applications. We continuously meet the rising expectations in respect of safety and reliability of our products. These products provide reliable functionality in various hazardous zones with ATEX and in many cases also IECEx certification.

CE - Designation and marking

CE 1258 Ex II 2 GD

Control No. of notified body for the supervision of the quality assurance system	I: Mining II: All other applications	Category (see below)	G = Gas D = Dust

- Category 1: Can be used in zone 0 (gas) and 20 (dust)
  - Potentially explosive atmosphere: Permanent
  - Two independent failures – safety
- Category 2: Can be used in zone 1 (gas) and 21 (dust)
  - Potentially explosive atmosphere: Regularly
  - One failure – safety
- Category 3: Can be used in zone 2 (gas) and 22 (dust)
  - Potentially explosive atmosphere: Unlikely or for very short time

IEC/EN 60079-0 – Gases

Ex ia IIC T6 Ga

Type of protection	Equipment groups (for gases)	Temperature class	Equipment protection level

- Type of protection: Intrinsically safe
- Equipment group (gases): IIC = Hydrogen, Acetylene
- Temperature level: Defines ignition temperature and permissible temperature of equipment surface
- Protection level: Referring to installation zone (Ga = Zone 0 = Category 1 in ATEX)

IEC/EN 60079-0 – Dust

Ex ia IIIC T130 °C Da

Type of protection	Equipment groups (for dust)	Surface temperature	Equipment protection level

- Type of protection: Intrinsically safe, powder filling, encapsulation, …
- Equipment group (dust): IIIC = Conductive dust
- Temperature level: Defines maximum surface temperature
- Protection level: Referring to installation zone (Da = Zone 20 = Category 1 in ATEX)

EN 50303 - Mining

Ex ia I Ma

Type of protection	Equipment for mining	Equipment protection level

- Category and Protection level:
  - Category M1 / Protection level Ma: Fully functional and safe when explosive atmosphere is present. Requires means to cope with two independent failures
  - Category M2 / Protection level Mb: These products are intended to be deenergised in the presence of an explosive atmosphere

Simple Apparatus

Pressostats and Thermostats, when combined with a certified switch amplifier (Zener barrier/Zener relay), can be used as "simple electrical apparatus" in Zone 1 and 2, as well as in Zone 21 and 22, according to IEC/EN 60079-11. These pressostats and thermostats are not suitable for Zone 0 and Zone 20. The use in safety relevant applications (approved electrical apparatus) is not permitted. Switch amplifiers are suitable for intrinsically safe applications. The device transmits signals from the hazardous area into the safe area.

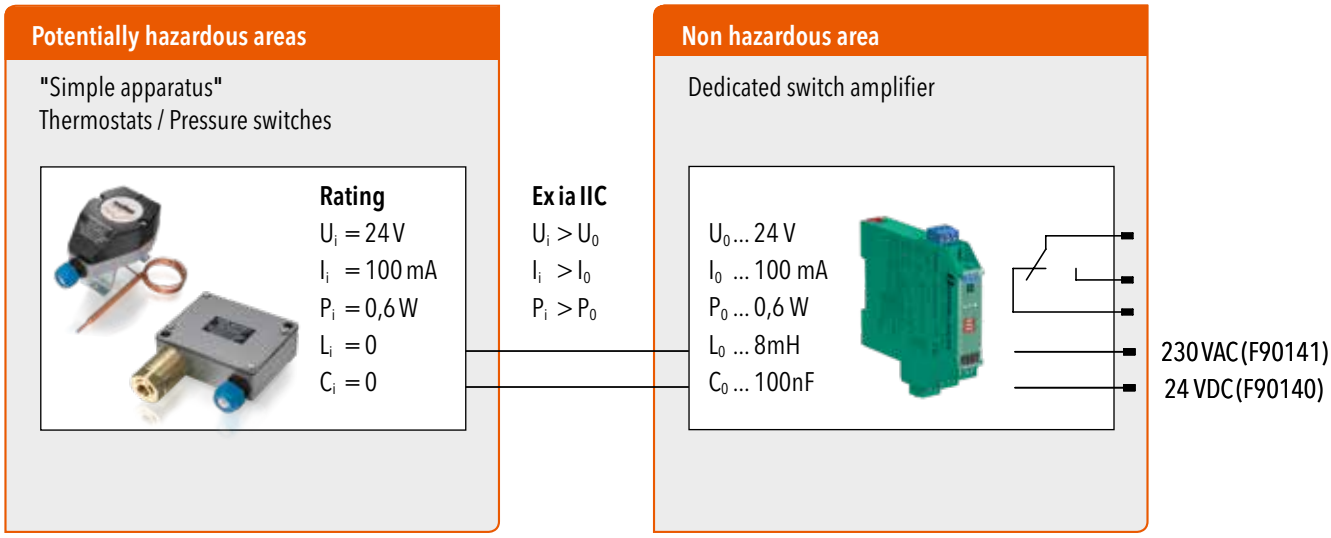

Recommended switch amplifier (see chapter „Accessories"):

Trafag parts no.: ZEN230VAC (230 VAC)

ZEN24VDC (24 VDC)

If another type of switch amplifier is used, make sure its electrical rating limits are within the specification of the „Simple Apparatus" thermostat or pressostat.

Fluid resistance guide

CODES: S - SATISFACTORY F - FAIR U - UNSATISFACTORY T - TEST FOR SPECIFIC APPLICATION

RESILIENT MATERIALS											PLASTICS													METALS							
BUNA 'N' (NBR)	ETHYLENE PROPYLENE (EPDM)	HYPALON	NEOPRENE (CR)	URETHANE	SILICONE	VITON (FKM/FPM)	BUTYL	FLUOROSILICONE	HYTREL	CELCON	DELRIN	LEXAN	NYLON	POLYSULFONE	PVC	TEFLON	POLYPROPYLENE	POLYETHYLENE	POLYPHENYLENE SULFIDE	POLYCARBONATE	ULTEM	ST. ST. DIN 1.4435/1.4404	STEEL	ST. ST. AISI430	ST. ST. DIN 1.4301/1.4305/1.4542	SILVER	49 - NICKEL IRON	MONEL	LEAD	IRON	INCONEL	COPPER	BRONZE	BRASS	ALUMINUM	
U	S	T	U	U	U	F	U	F	S	T	U	U	U	U	S	U	U	S	U		S	U	F	F	S		S	S	S	T	U	U	U	S	Acetaldehyde
S	S		F	U	F	F	F	F				S	U		S	S	S	S	U		S	U	S	S	S		U	S	F		U	U	U	U	Acetamide
U	S		U	U	U	U	T	U	U	S				U	S								S	S			S		S	S	S	S	F	F	Acetate, Amyl
T	S		T	U	T	T	T	U	U	T	T	S	S	S	T	S	F	T	S	S	S	S	U	F	S	F		F		U	U	U	U	U	F	Acetic acid, 10%
T	F		F	U	S	U	F	U	U	U	U	S	U	T	U	S	F	T	S	T	T	F	U	F	F	S	U	S	F	U	U	U	U	U	S	Acetic acid, Glacial
U	F	T	T	U	U	U	F	U	U	F	U		U	U	U	S	T	U	S	U		T	U	U	T	S		S	U	T	S	U	U	U	S	Acetic anhydride
U	S	U	U	U	U	U	F	U	U	F	F	U	S	U	U	S	S	T	S	U	U	S	S	F	F	S		S	F	S	S	S	S	S	F	Acetone
S	S	T	F		U	S	T	U	T		S	T	S	U	S	S	U	F	S	U		S	S	S	S	U		S	U	S		U	U	T	S	Acetylene gas
U	U		U		U	S	U						U			S						U	U	U	U			U	U	U					F	Acetylene tetra-chloride
U		S	U			S																S	T	T	T	T									S	Acrylic acid
U	S	S	F	U	U	S	F	T	T		S		S	S	S	S		T	S					F	S	S		S				S	S	F		Alcohol amyl
F	S	S	F	T	F	F	F	T	T	S	S		S		S	S		T			S		S	F	F	S		F	F	F	S	F	F	F	T	Alcohol ethyl (Ethanol)
S	S	S	F	U	S	U	F	S	T	S	S		S	U	S	S	S	S			S	S	S	F	S	S		S	F	S	S	S	S	S	T	Alcohol methyl (Methanol)
U	U	U	U	U	U	S	U	T					S			S								S	S							S		S		Alkazine
S			S	S	S								S			S											S				S	S	S	S	Alumina
S	S	S	S	S	S	S	F	T	F	F	S	S	S	S	S	S	S	S	S	T		U	U	U	U	F		F	U	U	S	T	T	U	U	Aluminum chloride
S	S	S	S	S	S	S	F	T		U	U		S	S	S	S	S	F	S			U	T	U	U	F		F	F	T		T	F		S	Aluminum uoride
S	S	S	S	S	S	S	T	T		F			S	T	S	S	S	S		U		F	F	F	F	S		F		F		F	F	F	F	Aluminum hydroxide
S	S		S	S	T	S	F						S		S	S	S	F		T		F	U	U	T	F		T	F	U		T	T	T	F	Aluminum potassium sulfate
F																S							U	T	T			F			F			U	F	Aluminum potassium 10%
F	F		F	S	T	F	F									S						T	U	U	U	T		U	F	U	U	T	T	U	U	Aluminum sodium sulfate
S	S	S	S	S	S	S	F	T	T	F	S	S	U	S	S	S	S	F	S	S		T	U	U	T	F		T	F	U	T	T	T	T	U	Aluminum sulfate (Alum)
F	T	U	S	U	U	U	F	U	U	U	U		S	F	T	S	F	T	S	U		S	S	S	S	T	S	U	F	S	S	T	U	U	F	Ammonia
S	F		S	S	S				F	T	T	S	S	S	S		F					F	F	F	F	F		S	F	F	F	U	U	U	F	Ammonium bicarbonate
S	T		T			U	T			F			T		S	S	F	F				F	U	U	U	F		F		U		U	U	U	U	Ammonium bromide
U	S		S		U	S	F			S	S		T	S	S	S	S	F	S			T	F	F	F	S		F		F	T	U	U	U	F	Ammonium carbonate
S	S		S	S	U	S	F	U	F	F	S	S	S	S	S	S	S	T	S	S		U	U	U	U	F		U	T	U	S	U	U	U	U	Ammonium chloride
T	S	S	S	U	S	F	T	T	U	S	U	U	S	S	S	S	S	S	S	U	T	S	U	S	S	U		U			S	U	U	U	F	Ammonium hydroxide
S			S			S							S			S	S						U		F										Ammonium monophosphate
S	S	S	S	T	U	F	S	U	F	F	S	S	S	S	S	S	S	S	S	U		S	T	F	S	S		U	U	F	S	U	U	U	T	Ammonium n trate
S		S	S	S	S	U							S			S							F	F	F			U		F	S	U	U	U	F	Ammonium nitrate hydroxide 25%
F	S			U	U	S	S									S	S	T				S	U	S	T	U	S	U			S	F	F	U	U	Ammonium persulfates 5%
S	S	S	S	S	S	S	F	U	F	F	F	S	S	S	S	S	S	S	S	S		T	S	F	S	F		F	F	T	S	U	F	U	T	Ammonium phosphate
S	S	S	S		S				F	F	U	U	S	S	S	S	S	S	S				T	U	T	S		F	F	T	F	U	U	U	U	Ammonium sulfate
S			S	S								S			S								U	U	T	F		U	F	U		U	U	U	U	Ammonium sulfite
S			S		T										S								T	S	S			S	S	S		F		T	F	Ammonium triphosphate
U	S	U	U	U	U	U	T	U	U	F	U	U	T	U	U	U	U	U	S	U		S	F	F	F	S		S			S	U	S	S	S	Amyl acetate
U	F	F	F	U	U	U	F	F	U	T	T	S	S	U	U	S						S		F	F	S		S	S	S		T	T	T	U	Aniline dyes
U	F	T	U	U	U	U	F	U	T							S	U	U	U	U		U	U	U	U	T		F			U	T	U	U	U	Aniline hydrochloride
F	F		F			S																														Animal fat
T			T										S		S	S							U	U	U			F			F			U	U	Antimony trichloride
S			S		S					S						S												S								Antioxidents
F	T		S		F	F			S	S			S				S					S	F	S	S	S	S	S	T	T	T	T	T	T	Argon gas
T	U		U		U	S				S			S		U	S							S	S	S	S	S	S	S	S		S	S	S		Aromatic hydrocarbons
S	S	S	S	T	S	S	F	S					S	S		S	S	F	S	T		F	T	F	T	U		U	F	U	U	T	T	T	U	Arsenuc acid
S	U		S		S	U	U									S						U	T		U	F		S				U			T	Arsenic trichloride
F	U	U	F	S	U	S	U	F	S	S	S	F	F		S	S	S	F				S	S	F	S			S		S	S	S	S	F	S	Asphalt
S	S	S	S	S	S	S	F	S	F	S	S	S	S	S	S	S	S	F	S	S		U	T	S	S	S		S			S	F	F	U	U	Barium chloride 5%
S	S	S	S	U	S	S	F	S	F				S	S		S	S	F	S	U		T	T	S	S	S		S			S	U	U	U	U	Barium hydroxide
F	F		S		T	S	T	S			S	S		S	S	S	S	F		U		F	T	S	S	S		T			F	U	U	U	F	Barium nitrate
U	S	S	S	S	S	S	F	S		S			U	S	S	S	S	F				F	U	F	S	U		S				U	U	U	U	Barium sulphide
S	S		F	U	S	S	S	S	F	S	S	S	S		S	S	S	S	S	S		S	S	F	S			S		S	S	S	F	F	S	Beer
S	S	S	S	S	S	S					S	S	S		S	S	F	F				S	S	F	S		S	S		S	S	S	S	F	S	Beet sugar liquid
U	U	U	U	U	T	F	U	F	U	F	T	U	S	U	U	S	U	U	S	U		F	S	S	S	S		F	F	S	S	S	S	S	S	Benzene benzol (Benzene)
U	S	U	U	U	U	U	F	U	F				T	U	U	S	U	U	S	U		T	F	F	F	U		F			F	T	T	T	T	Benzaldehyde
U	U	T	U	U	U	F	U	F	U	F	T		F	U	S	S	T	F	S	S		F	F	F	F	S		F	U	U	S	T	T	F	T	Benzoic acid
S	F	F	S	U	S	S	F	T	T				U		S	S	S					T	T	T	F			F	U	T		U	U	U	U	Black sulfate liquor
T	U	U	T	U	T	T	U	T	T		S	S	T		S	S							S		T			T	U	S		U				Blast furnace gas
S	S		S		S	S							S			S								U	T			U				F	F	U	U	Bleaching powder, wet
U	T		T		T	U				S		S		S	U	S						S	U	S	S			S			S				T	Blood
F	S	F	T	U	S	S				F	F	U	S	S	S	S	S	S					S	S	S			S		S	S	F	S	F	U	Borax
S	S	S	T	U	S	S	F	T	F	U	U		T		S	S	S	S	S	T		F	U	F	T	S	S	T	F	U	S	T	T	T	T	Boric acid
U	S		F	U	U	U	F	U		T											U			S	S	S						S	S	S		Brake fluid (non-petroleum)
S	S	S	S		S	S				S	S	S	S	S	S	S		T						U				S		F	S	F	F	U		Brine
U	U	U	U	U	U	F	U	T	U	U	U	U	U	U	U	S	U	U	U	U		U	U	U	U	S		T	T	U	F	T	T	T	U	Bromine, dry
U	U	U	U	U	U	F	U	T	U	U	U	U	U	U	U	S	U	U	U	U		U	U	U	U	F		U	U	U	U	U	U	U	U	Bromine, wet
S	S	T	T	S	U	S				S			S	U		S	U	U	S	U		S	S	S	S	T		S		S		S	S	S	T	Butadiene (gas)

Due to the numerous different application possibilities Trafag cannot accept any guarantee for the correctness of these recommendations. We therefore suggest that for a particular application you carry out tests to verify the fluid resistance.

trafag sensors controls

Fluid resistance guide

CODES: S - SATISFACTORY F - FAIR U - UNSATISFACTORY T - TEST FOR SPECIFIC APPLICATION

	RESILIENT MATERIALS													PLASTICS												METALS								
	BUNA N (NBR)	ETHYLENE-PROPYLENE (EPDM)	HYPALON	NEOPRENE (CR)	URETHANE	SILICONE	VITON (FKM/FPM)	BUTYL	FLUOROSILICONE	HYTREL	CELCON	DELRIN	LEXAN	NYLON	POLYSULFONE	PVC	TEFLON	POLYPROPYLENE	POLYETHYLENE	POLYPHENYLENE SULFIDE	POLYCARBONATE	ULTEM	ST. ST. DIN 1.4435/1.4404	STEEL	ST. ST. AISI430	ST. ST. DIN 1.4301/1.4305/1.4542	SILVER	49 - NICKEL IRON	MONEL	LEAD	IRON	INCONEL	COPPER	BRONZE	BRASS	ALUMINUM	
	F	U	F	F		T	S	U	S	F	S	S	U	S		T	S	U	U	S	U		S	S	S	S	S		S	S	S	T	S	S	S	S	Butane
	S	F	S	F	U	F	S	F	T	T				S	S		S					S	S	S	S	S	F		S				S	S	S	S	Butanol
	S	S	S	F	S	T	S		T		S			S			S	S	S		S		S	U	S	F			S		U	S	U	U	U	S	Buttermilk
	U	T	U	U	U	U	U	U	U	U	F	F	U	S	U	U	S	U	U	S	U		S	S	F	F	S		F	F	F		F	F	F	S	Butyl acetate
	S	F	S	S	F	T	S				S			S			S	S	T					S		F			S		S		S	S	S	S	Butyl alcohol
	T	U	U	U		U	S	U	T	U							S						F	F	F		F						F	F	F	F	Butyl stearate
	U	F	U	U		S	F	T	T	T	U	U		U	U		S	T		S	U		F	T	U	U	S		T	U	U	S	T	T	U	T	Butyric acid
	F	S	U	F	U	U	U	F	U														T	T	F	T	F						F	F	F	U	Calcium acetate
	S	U	S	S		S	F	U	T	U	U	U	U	U	S	S	S	S	S	S	U		T	U	U	F	F		U	F	U	U	T	F	U	U	Calcium bisulfite
																	S	S						S		F			F		S		U			U	Calcium carbide
	S	S	S	S	U	S	S	T	T		S	S		S		S	S	S	S		U		F	F	F	S	S		F	U	F	T	F	S	F	S	Calcium carbonate
	F	S		F			S	F			F	S		U		S	S	S	S				F	F	F	F	T		T		F	T	T	U	T	T	Calcium chlorate
	F	S	S	S	S	S	S	F	T	F	F	S	S	U	S	S	S	S	S	S	U		T	S	T	F	S	S	T	U	T	S	T	F	T	U	Calcium chloride
																	S						T	T		F	S						F	F	U	T	Calcium uoride
	S	T	S	T	U	S	S	T	T	T	S	S	S	S	S	S	S	S	S		U		F	F	F	F	S	S	F	U	F	S	F	F	U	U	Calcium hydroxide
	U	S	S	U	U	S	F	T	F	T	F	F		T	S	S	S	S	S	S	U		U	U	U	U	T		U	U	U	U	U	U	U	U	Calcium hypochlorite
	S	S	S	S	U	F	S	T	T		S			T	S	S		S	S	S	T		T	T	F	T	F						F	F	F	T	Calcium nitrate
	S	S	S	U	S	S	S	T			S			S	S	S	S	S		S	S		T	T	F	F	S		F	F	F		U	F	U	F	Calcium sulfate
	S	S	S	S	S	F													U					F	F	F	U						U	U	U	T	Calcium sulphide
	S	T	S	S	U	S	S	F	T		S	S		S			S						F	U	F	S			S		U			U			Calgon
	S			S			S										S							S													Caliche liquid
	S	S	S	S	U	S					S	S	S		S	S	S	S							F	S			S				S	S	F	F	Cane sugar syrups
	U	F	U	U		U	F				U			S			S							T	F	S	S		F	F	T		F	S	F	T	Carbolic acid (Phenol)
	U	U	U	U	S		S				S	S	S	S	S	U	S	U						S	F	F	F		F	F	F	S	F	F	F	F	Carbon bisulfide
	S	T	T	T	S	U	T	T	T	F	S	S		U	S	S	S	S	S	T		S	S	S	S	S		S	S	S	S	S	S	S	S	S	Carbon dioxide dry
	U	U	U	U	U	U	S	U	T	U	F	F	U	U	U	U	S	U	U	S	U		T	S	S	S	F		F			S	U	F	U	S	Carbon disulfide
	F	S		T		S	S	T	F	F	S	T		T		S	S	S	S	S			S	S	F	S	F		S	S	S	S	S	S	S	S	Carbon monoxide
	U	U	U	U	U	U	S	U	U	U	F	F	U	U	U	T	S	U	U	T	U	S	F	T	F	F	F		F	T	U	S	T	F	T	U	Carbon tetrachloride
	S			S		S	S							S			S								S	S			S				T	F	F	F	Carbonated water
	T	S	S	S	T	S	S	F	T	U	S			F	S		S	S	S	S	F		S	U	F	F	F		S	U	U	S	T	T	F	F	Carbonic acid
	S	F	S	S	F	S					S	S	S	S	S	S	S	S						S	T	S			S		S	S	S	S	S	S	Castor oil
												S																									Cellosolve (see Ethyle acetate)
	U	S	U	U	U	T	T										S							S	S	S	S	S	S	S	S		F	S	S	F	Cellulube
	S	U	T	F	T	T	S					F	S	S		S	S							S	T	S			S		S		F	T	F	S	China wood oil (Tung)
	U	U		U	U	U	S	U	T	U													T	T		T	T						T		T	T	Chlordane
	F			S										U			S								S	S			T		U					U	Chlorides, organic
	U										U	U					S	U	T	U			U	U	U	U	U		U			U			U	U	Chloric acid
	F	F			S		F							U			S	F							U	U									U		Chlorinated water
	U	U	U	U	U	U	S	U	T	U			U	U	U	T	S	U					T	F		F	T						T	S	T	U	Chlorinated solvents
	U			U		F	S				U	U	U	U	U	T	S	T							F	U			S	F	U		T	T	U		Chlorine anhydrous liquid
	U	U	U	U	U	U	F	U	T		U	U	U	U	U	U	S	U	U	U	U		T	T	U	U	F		T	F	T	T	T	T	U	U	Chlorine, gas
	U	U	U	U	U	U	T	U	T		U						S	U					U	U		U	S						U	U	U	T	Chlorine, dioxide
	U	U	U	U	U	U	U	U	U		U	U	U		U	U	F						T	S	T	T			S				T	T		T	Chlorine trifluoride
	U	F	T	U	U	U	S	T	U	U	U	U		S	U		S	S	U	S	U		T	U	U	U	U		F			F	U	F	U	U	Chloroacetic acid
	U	U	U	U	U	U	S	U	T	U	S	S	U	T	U	U	S	U	U	S	U		T	T	T	F	F		F		T	T	F	F	F	S	Chlorobenzene
	U	U	U	U	U	T	T	U	U	U	F	F	S	S	U	U	S	U	U	U	U	F	T	T	F	S	S		S	F	T	T	T	F	T	U	Chloroform
	U	U	U	U	U	U	U	U	U	U	U	U		U	U		S	U	U	U	U		U	U	U	T			F			F	U		U	F	Chlorosulfonic, acid, diluted
	U			U	U		T	U	T														T	T	T	T	F						T	U	T	T	Chlorothene (trichloroethane)
	U	F	U	F		S	S					U		S		T	S							U	U	U			F		U		U	U	U	U	Chlorox
	F					S	T				U						S												S					U	U		Choline chloride
	U	F	U	U	U	F	F				U																										Chrome plating solution
	U	U	F	U	U	T	U	T	T	U	U	U		U	U	T	S	T	T	T	T		T	U	U	T	U		U	F	F	F	U	U	U	U	Chromic acid
	S	S		F	T	T	S	F						S			S	S					T	U	U	F			T	F	U		T		T	U	Chromium-potassium sulfate
														S			S							U	F	F			T	F	U		F		F		Chromium sulfate (basic)
	S	S		S	U	S	S	U	T	T	S			T			S	S					S	U	S	S	S		S				S	S	U	F	Cider
	S	S	S	S	S	S	S	S	T	F	S			S	T	S	S	S	F	S	T	T	T	U	T	T	T		T	U	U	F	U	U	U	T	Citric acid
	T	U		U	U	U	T	U	T	U				U			S						S			S			S							S	Coal tar
	S	F	U	U	U	U	S	F	T		S			T			S	T					F	F	S	S			S		S			T		T	Cocoanut oil
	T	S	U	F	S	F	S	F	T		S			T			S	T			T			U			U		S		U		U	U	U	S	Cod liver oil
	S	T		S	U	S	S	T	T		S			S			S	T			T		S		S	S			S				S	S	S	S	Coffee
	T	U	U	T	U	T	F	U	T			S	T	T		S	S	T					T	S	S	S	S		S	U	S		T	T	U	S	Coke oven gas
		T					S				S														S	S							S		S		Cooking oil
	T	S	U	F	U	U	U	T	U								S						T	U	F	F	S		F		U		F	T	U	U	Copper acetate
	U	S		U	U	U	U		U		S	S	U			U	S						T	S	S	S	U				S		U	U	U	U	Copper ammonium acetate
	S	S	F	F	S	S	S	F	T	T	U	U	U	U	S	S	S	S	S	S	T		T	U	U	U			U	U	U	U	U	U	U	U	Copper chloride
	S	S	S	S	S	S	S	T	T		S			T	S		F	S	S	S	U		T	S	S	S	S		F		S	U	U	U	U	U	Copper cyanide (elect. pl. sol.)
	S	S		S	T	S	S	F			S	S	S	S	S	S	S	S	S	S	U		F	U	F	F	F		U		U	U	U	U	U	U	Copper nitrate
	S	S	S	S	S	S	S	F	T	F	S	S	S	F	S	S	S	S	S	S	T		F	U	F	F	F		T	F	U	U	U	U	U	U	Copper sulfate
	S	S	S	S	S	S					S	S	S	S	S	S	S		S					U	F	F			F	F	U		U			U	Copper sulfate (elect. pl. sol.)

Fluid resistance guide

CODES: S - SATISFACTORY F - FAIR U - UNSATISFACTORY T - TEST FOR SPECIFIC APPLICATION

RESILIENT MATERIALS												PLASTICS													METALS								
BUNA 'N' (NBR)	ETHYLENE PROPYLENE (EPDM)	HYPALON (CR)	NEOPRENE	URETHANE	SILICONE	VITON (FKM/FPM)	BUTYL	FLUOROSILICONE	HYTREL	CELCON	DELRIN	LEXAN	NYLON	POLYSULFONE	PVC	TEFLON	POLYPROPYLENE	POLYETHYLENE	POLYPHENYLENE SULFIDE	POLYCARBONATE	ULTEM	ST. ST. DIN 1.4435/1.4404	STEEL	ST. ST. AISI430	ST. ST. DIN 1.4301/1.4305/1.4542	SILVER	49 - NICKEL-IRON	MONEL	LEAD	IRON	INCONEL	COPPER	BRONZE	BRASS	ALUMINUM	
S	U	F	F	T	S	S	F	T	S	F	F		T	S	S	S	S			U			S	S		S	S		S	S	S		S	U	F	S	Corn oil
S	T		S	T	S	T		T		S						S								S	F	S	S	F	T	S	S		S	S	F	F	Corn starch slurrys
S	T	S	U	T	S	F	U	T	T	S	S		S	S	S	S	S	S	S				S	S	S				S	S	S	S	T	S	U	S	Cottonseed oil
U	U	U	U	T	U	S	U	T	U	U	U		U	U	T	S	U	U	S	U		F	S	F	S			F	U	F	S	F	S	F	S	Creosote
U	U	U	U	U	U	F	U		U	U	U		U			S	U	U		U		T	U	F	S	F		F	U	F		F	F	U	F	Cresylic acids (alkyl phenols)
F					S																		U	U	U			U			U			U	U	Cupric chlorides 5%
U	S	U	U	U	T	S	U	U	T	F	F	U	T	F	U	S	F	U	S	U		T	U		T	T		T			T	T	T	T	F	Dibutyl phthalate
S	U		U	U	U	S	U	T	T	S			S	S		S	S	U	S	S		S	S	S	S	S	S	S	S	S	S	S	S	S	S	Diesel fuel
U	U			U	U	S				S			S			S		U				S	S	S	S	S	S	S	S	S	S	S	S	S	F	Diesel oil, light
U	U	U	U	S	U	U				F													F	F	F			F		F		F	F	F	F	Diethyl ether
U	U		U	U	U	F	U	U	U	T	T		U			S	T	U		U		F	U	T	F	T		S			F	T		U		Dichlorethane
																S						F	U		F			S	F	F		F	F	F	F	Difluoroethane(dow chem. # 200)
F			S		S					S			S		S	S	S							S	S	S		S		U					S	Distilled water
F	U		T	S	U	S	U	T	F	S			S			S						S	S	S	S	S	S	S	S	S	S	S	S	S	S	D.T.E. Lubricating oil
U	U	U	U	U	U	S	U	S	T	S	T		U	U		S	U		S	T		S	S	S	S					U			T	T	T	Dowtherm A or E
T			S	F					T	S	S	T	S		U	S						S	S	S	S	S	S	S		S	S	S	S	S	T	Enamel
S	U		F	S	S	S	U	T					S			S						S	S	S	S	S	S	S	S	S	S	S	S	S	S	Esso # 90 line
S	U	F	F	U	U	S	U	T		S	S	U	S		U	S	U					S	S	S	S	S		S		S		S	S	S	S	Ethane
U	U	U	T	U	U	U				S			S		U	S	U						S	F	S	S		F	F	F	S	F	S	F	S	Ether
U	T	U	U	U	U	U	T	U		F	F	U	S	U	U	S	S	U	S	U	U	S	S	F	S	S		F		T	T	F	S	F	T	Ethyl acetate
U	U	U	U	U	U	F	U	F		F	F		S	U		S	U	U		U		F	T	F	F	S						F	F	F	T	Ethyl benzene
S	F	F	F	F	F	U	T	U	T	S	S	U	S		T	S						F	T	F	F	S						F	F	F	F	Ethyl cellulose
S	S	U	U	U	U	S	T	T	U	S	S	U	S	U	U	S	U	U	S	U		T	T	T	T	S		F		F	T	T	T	T	T	Ethyl chloride
U	U	U	F			S				T													F	F	F	U						U	U	U	F	Ethyl metcaptan
U	S		S	U	T	U	T	U		S			S			S	T					U	F					T				F	F	F		Ethyl sulfate
S	U		U	T	U	S	T	T		S			S		F	S						S	S	S	S	S		S		S		S	S	S	S	Ethylene
										S					U		U	U					T			F		F	F	T		T	T	T	T	Ethylene bromide
	T	T	U	U	T	T				S				U		S			S				T	T	T	F		F		T		T	F	F	T	Ethylene chloride
U	U	U	U	U	U	S	U	U		S			S			S	T					T	U	T	T	F		T		U		T	T	T	U	Ethylene dibromide
U	U	U	U	U	U	T	U	U	U	T	T		S	U	U	S	U	U	S	U		F	T	T	F	S		F	F	T	T	U	F	F	F	Ethylene dichloride
S	S	S	F	U	T	S	S	S	T	S	S		S	S	S	S	S	S	S			F	S	F	S	S		F	F	F	S	F	F	F	F	Ethylene glycol
U	T	U	U	U	U	U	T	U	T	S	S		S	S	U	S	U	U	U	U		F	S	S	F	T		S		F		T	T	T	U	Ethylene oxide
F																							T	F	S	S		F	F	T		F	S	F	U	Embalming fluid
																																				Ethanol (see alcohol-ethyl)
S	T	U	U		T	S				S			S		S	S	T						U	S	S	S		T	U	U	S	U	U	U	S	Fatty acids
S	S	F	F	S	F	S	F	T	F	F	S	S	U	S	S	S	S	S	S	S		U	U	U	U	U		U	U	T	U	U	U	U	U	Ferric chloride
T	S	S	S	S	U	S	T	T		F			T	S	S	S	S	S	S	T		S	U	F	S	U		U		U	U	U	U	U	U	Ferric nitrate
S	F		S	T	S	S	F	T	T	F	F		S	S	S	S	S	S	S	T		T	U	T	T	T		T	F	U	F	U	U	U	U	Ferric sulfate
			T			T										S							U			U			F	U		U	U	U	F	Ferrous ammonium sulfate
S	S		S	T	S	S	F		T	F	F	S	U	S	S	S	S	S	S	U		U	U	U	U	F		U	U	U	U	T	U	T	U	Ferrous chloride
S	S		S	T	S	S	F	T	T	F	F	S	S	S	S	S	S	S	S	T		F	U	S	S	U		T	T	U	F	T	T	U	S	Ferrous sulfate
S	U		F	S	T	S		T					S			S	S	S		T		S	S	S	S			S		S		S	S		U	Fish oil
S	S	S	S	U	T	S	U	T	U					S		S	S	F	S			T		S	S			T			T		T		T	Fluoboric acid
U	T	T	U	U	U	T	U		U	U	U		U	U		T	U	U	U	U		T	U	F	F	S		S	F		F	T	T	T	F	Fluorine
S	S	S	S	U	S	U	T	U	F	U	U			S		S	S	T	S			T	U	T	T	T		S			T	T	U	U	U	Fluosilic acid
S	S	T	T	U	S	U	T	U	U	S	T	U	S	T		S	S	T	T	S		S	T	F	S	S		F	U	T	S	F	F	F	S	Formaldehyde
U	F	S	S	U	S	U	F	U	U	U	U	S	U	F	T	S	S	U	S	T	T	F	U	U	T			F	U	U	F	T	U	T	U	Formic acid
F	U	S	F	U	U	U	U	F	T	S			S	U	T	S	U	U	U	U		S	U	S	S	S		F		U	T	S	S	S	S	Freon 11
S	U	S	S	S	U	T	U	U	T	S			S	U	S	S	U	U	U	U		S	U	S	S	S		F		U	S	S	S	S	S	Freon 12
S	U	S	S	U	U	U	U	U		S			S	U		S	U	U	U	U		S	U	S	S	S		F		U	S	S	S	S	S	Freon 13
U	U	T	T		U	U	U			S			S	U	U	S	U	U	U	U		S	U	S	S	S		F		U	S	S	S	S	S	Freon 21
U	T	T	T	U	U	U	U	U	U	S			S	U	U	S	U	U	U	U		S	U	S	S	S		F		U	S	S	S	S	S	Freon 22
U	T		F			U	T			S			S	U		S	U	U	U	U		S	U	S	S	S		F		U	S	S	S	S	S	Freon 31
S	T	S	S				T			S			S	U		S	U	U	U	U		S	U	S	S	S		F		U	S	S	S	S	S	Freon 32
F	U	F	T	F	U	T	U			S			S	U		S	U	U	U	U		S	U	S	S	S		F		U	S	S	S	S	S	Freon 112
S	U	S	S		U	U	U	U	S	S			S	U		S	U	U	U	U		S	U	S	S	S		F		U	S	S	S	S	S	Freon 113
S	U	S	S	T	U	F	U	F	T	S			S	U		S	U	U	U	U		S	U	S	S	S		F		U	S	S	S	S	S	Freon 114
S	S		S		U	T	T			S			S	U		S	U	U	U	U		S	U	S	S	S		F		U	S	S	S	S	S	Freon 115
S			S							S			S			S							U	S	S	S				U		S	S	S	S	Freon 218
U			S			U				S			S	U		S	U	U	T	U		S	U	S	S	S		T		U	T	S	S	S	S	Freon 502
S	S		S	U	U	S	S	U	U	F	F		U	U		S	U	U	U	U		S	T	S	S	S		F			S	S	S	S	T	Freon 503
S													S											S	S							S		S		Freon 13B1
S			S							S			S			S							U	S	S	S				U		S	S	S	S	Freon 6316
S			S							S			S			S							U	S	S	S				U		S	S	S	S	Freon 6318
S	U	S	S	T	U	S	U	U	S	S	S		U	T		S	T	U		T	S	S	T	S	S	S		F			S	S	S	S	T	Freon TF (solvent)
T	T	S	T	S	U	S	T			S	S					S	T	U		T		U	U	S	T						S	S	S	S	T	Freon TWD 602 (solvent)
F		F	T			S	T			S	S					S	T	U		T		S	T	F	F			F			F	S	F	S	F	Freon TE 35

Fluid resistance guide

CODES: S - SATISFACTORY F - FAIR U - UNSATISFACTORY T - TEST FOR SPECIFIC APPLICATION

	RESILIENT MATERIALS												PLASTICS													METALS								
	BUNA 'N' (NBR)	ETHYLENE PROPYLENE (EPDM)	HYPALON	NEOPRENE (CR)	URETHANE	SILICONE	VITON (FKM/FPM)	BUTYL	FLUOROSILICONE	HYTREL	CELCON	DELRIN	LEXAN	NYLON	POLYSULFONE	PVC	TEFLON	POLYPROPYLENE	POLYETHYLENE	POLYPHENYLENE SULFIDE	POLYCARBONATE	ULTEM	ST. ST. DIN 1.4435/1.4404	STEEL	ST. ST. AISI430	ST. ST. DIN 1.4301/1.4305/1.4542	SILVER	49 - NICKEL-IRON	MONEL	LEAD	IRON	INCONEL	COPPER	BRONZE	BRASS	ALUMINUM	
																																				Freon TM
T	T		T	T	U	S	T			S	S			U		S	T	U		U		S	T	F	T			F			F	F		S	U	Freon TMC (solvent)
F	U		U	U	U	U	U	T	T	F	F			U		S	U	U	U	U		S	T	S	S	S		F			S	S	S	S	T	Freon MF (solvent)
F	U		U	T	U	S	U			F	F			U		S	U	U	U	U		S	T	S	S	S		F			S	S	S	S	T	Freon BF (solvent)
S	S	S	S	S	S	S		S	T	T	T	S	S		S	S	S	S	S			S	U	F	F			S		U		F	F	U	T	Fruit juices
T	U		U	T	U	S	U	T	T	S	S	S	S	F	S	S			S				T	S	S	S		S	S	T	S	T	S	S	S	Fuel oils
U	F	U	U	U	U	U	S	U	T	F	F	S	U	U	U	S	U	U	S	U		S	S	S	S	F		F	T	T	F	F	S	F	S	Furfural
T			S				S			F	F			U		S	U	U	U	U		S	T	S	S			F			S	S	S	S	T	Freon 123
U	S		S	U	U	U	U	U	F	F			T	U		S	U	U	U	U		S	T	S	S			F			S	S	S	S	T	Freon 134A
S	U	T	U	U	U	F	U	T	F	U	U		S	F	S	S	T	U	S	T		S	U	F	S	S		F			S	F	S	F	S	Gallic acid
T	U	U	U	T	U	S	U	S	T	S	F	S	S	T	S	S	U	U	S	T	S	S	S	S	S	S		S	S	T	S	T	S	S	F	Gasoline
S	S	S	S	U	S	S	T	T		S	S		S	S	S	S	S	S	S			S	U	S	S			S		U		S	S	F	S	Gelatin
S	S	S	S	U	S	S	F	T	F	S	S	S	S	S	S	S	S	S		T		S	S	S	S			S		S		S	S	F	S	Glucose, edible
S	S	S	S	U	S					S	S	S	S	S	S	S							S	T	S			S		S		S	S	F	S	Glue (non acid)
S	S	S	S	U	S	S	F	T	T	S	S	S	S	S	S	S	S	S	S	S		S	S	S	S	S		S	F	F	S	F	S	S	S	Glycerine (Glycerol)
S	U		U	S	U	S	U	T	T	S	S		S			S	T					S	S	S	S	S		S		S		S	S	S	S	Grease, petroleum base
S			S	S	S	S							S			S						S	S	S	S	S	S	S	F	S		S	S	S	U	Goulac (core binder)
S	S		S	T	T	S	F	T	U				U	S		S						F	T	U	F			F	U	T		U	U	U	U	Green sulfate liquid
S	S	S	S	U	S					S								S					S	S	S							S	S	S		Glycol solution
U	U		U	U		F		U	U	U	U		U	U		S	U	U	U	U		S	U	S	S	S						S		F	U	Halon 1011
F			U			U												U																S		Halon 1202
T						S		T										U				S	S	S								S	S	S	S	Halon 2402
T			S	T	F	F	S	U		S	S		S			T		U				S	T	T	S						S	S		S	T	Halon 1301
T			U			F		U					S									U	S	S	S							S	S	S	S	Halon 1211
S	U	F	F	F	U	S	U	T	T	S	S		S	U		S	U	U	S	U		S	S	S	S	S		S				S	S	S	S	Heptane (liquid)
F	U	S	F	S	U	S	U	T	T	S	S		T	S		S	U	U	S	U	S	S	S	S	S	S		S		F		F	F	S	F	Hexane
S	U	S	T	F	U	S		T	S	S	S		T	S		S	T	U	S	T		S	S	S	S	S	S	S	S	S		S	S	S	S	Hydraulic oil
F	S		F	U	U	U	S	U	U	F		S	S		S	S	U					S	U	F	S	U		U	U	U		U	U	U	S	Hydrazine
U	S	S	U	U	U	F	T	U		U	U	S	U	S		S	S	T	U	U		U	U	U	U			U			U	U	U	U	U	Hydrobromic acid
T	U	T	U	T	U	F						U	U	U	U	S								F	F	F		S				S	S	S	S	Hydrocarbons (chlorinated)
T	F	T	T	U	U	T	T	T	U	U	U	S	U	S	S	F	T	T	T	T	T	U	U	U	U	T		U	U	U	F	U	U	U	U	Hydrochloric acid (aerated)
T	F	T	U	U	U	T	T	T	U	U	U	S	U	S	S	F	T	T	T	T	T	U	U	U	U	F		U	U	U	T	U	U	U	U	Hydrochloric acid (air free)
S	S	S	S	U	U	S	F	T	U	U	U	S	U	S	S	S	S	S				F	U	S	S	T		F		U	T	U	U	U	S	Hydrocyanic acid
T	T	S	U	T	U	S	U	U	U	U	U	S	U	S		S	T	T	T	T		T	T	U	U	F		U	U	U	U	U	U	U	U	Hydrofluoric acid (aerated)
U	T		U	T	U	S	U	U	U	U	U	S	U	S		S	T	T	T	T		T	T	U	U	S		F	T	U	U	T	T	U	U	Hydrofluoric acid (air free)
S	S	S	S		U					U	U	S		S	S								U	U	U			S			S			U	U	Hydrofluosilicic acid
S	S	S	S	S	T	S	S	U	F	U	U	S	S	U	S	S	S	S	S	S		S	S	S	S	S		T	S	S		S	S	S	S	Hydrogen 377
U	T		U	U	U	S	F	U		U	U			T		S	F		T	U		T	T	U	U	U		U	U		U	U	U	U	U	Hydrogen bromide(anhydrous)
U	S		T		S	T	T	U		U	U		U			S	S	S				S	T	U	T	F		T	F	T	S	T	T	T	U	Hydrogen chloride(anhydrous)
T	F		U	U	U	S	U	U		U						F	T	T					F	F	F	F		S			S	T	T	T	U	Hydrogen ßoride
U	T	U	U	T	T	T	T	T	U	T	U		U	T	S	S	T	T	T	T		T	T	T	T	U		T	U	T	F	U	U	U	F	Hydrogen peroxide
T	S	T	F	U	T	U	F	U	T	U	U	S	U	S	S	S	S	S	S	T		T	T	T	T	U		T	F	T	S	U	U	U	F	Hydrogen sulfide
T		S	T	S		S							F		S	S							S	S	T			S		U					T	Ink (non aniline)
U	F	F	U	U	U	S	T	T	T	U	U		S	S	U	S	T	U	U			T	T	T	T	U		T	U	U	S	T	T	U	U	Iodine
																							U	U	U			T	F	U		T		U	Iron potassium sulfate
T	U		F	T	U	F	U	T		S			S			S						S	S	S	F	S	S	S	S	S	S	S	S	S	S	Isobutane
S	U	S	F	S	U	S	U	S	S	S	F	S	T		S	S	T	T	S	T		S	S	S	S	S	S	S	S	S	S	S	S	S	S	Isooctane
U	F	U	U	U	U	U	F	U	U	S			T	U		S	T	T		U		F	S	T	F	U		T				U		T	T	Isopropyl acetate
F	S	S	F	U	S	S	F	T	T	S	S		S	F		S	S	F	S	S	S	F		S	S	S		S			F	S	S	S	S	Isopropyl alcohol (Isopropanol)
F	U		U	U	U	S	U	T					U					U																		JP-1, JP-A, JP-A1
F	U		U	U	U	S	U	T					U					U																		JP-2
F	U		U	U	U	S	U	T		T	T		U	S		S	T	U	S	T		S	S	S	S			S			S	S	S	S	S	JP-3
T	U	U	U	U	T	S	U	T	S	F	F	S	S	S	S	S	T	U	S	T	S	S	S	S	S	S	S	S	S	F	S	F	S	F	S	JP-4
S	U		U	T	U	S	U	T		F	F			S		S	T	U	S	T		S	S	S	S			S			S	S	S	S	S	JP-5
T	U		U	U	U	S	U	T										U				S	S	S				S				S	S	S		JP-6
																		U																		JP-7
T	U		U	U	U	S	U	T										U				S	S	S	S			S				S	S	S		JP-8
S	U	U	F	F	U	S	U	T	F	S	S	S	S	F	S	S	U	U	S	T	S	S	S	S	S	S		S	S	S	S	S	S	S	S	Kerosene
S	T	S	S	S	T	S		T					S		S	S						S	U	S	S			S		U			U		U	Ketchup
T			U		U		U	S										U																		JP-B
T	U		U		U	S	U	U										U																		JP-X
U	U	U	U	U	U	U	U	U	U	S			S			S	U	T		U		S	T	F	F	S		S		T		S	S	S	S	Lacquers & Lacquer solvents
T	T	T	T	U	S	F	T	T	U	U	U		T	S	T	S	S	T	S	F		U	U	T	T	F		T	U	U	S	T	U	U	U	Lactic acid
S	F	U	U	U	F	S	U	T	T	F	F		S			F	T	T		S		S	T	F	F	S		F	U			U	U	T	U	Lard
S	S	T	S	U	U	U	F	U		F	S	U	S	S	S	S	S	S	S			F	U	F	F	F		S			F	U	U	U	U	Lead acetate
U	S														S	S								S	S											Light water (fire ext.)

Fluid resistance guide

CODES: S - SATISFACTORY F - FAIR U - UNSATISFACTORY T - TEST FOR SPECIFIC APPLICATION

RESILIENT MATERIALS												PLASTICS												METALS									
BUNA N' (NBR)	ETHYLENE PROPYLENE (EPDM)	HYPALON	NEOPRENE (CR)	URETHANE	SILICONE	VITON (FKM/FPM)	BUTYL	FLUOROSILICONE	HYTREL	CELCON	DELRIN	LEXAN	NYLON	POLYSULFONE	PVC	TEFLON	POLYPROPYLENE	POLYETHYLENE	POLYPHENYLENE SULFIDE	POLYCARBONATE	ULTEM	ST. ST. DIN 1.4435/1.4404	STEEL	ST. ST. AISI430	ST. ST. DIN 1.4301/1.4305/1.4542	SILVER	49 - NICKEL IRON	MONEL	LEAD	IRON	INCONEL	COPPER	BRONZE	BRASS	ALUMINUM	
S	S		S		S	S							S			S								F	F	S		S				S	S	S	F	Lime slurry
S	S	T	S	T	S	S	F	T					S			S	S	S				S	S	F	S			S		S		U	U	U	U	Lime sulfur
	S	U	U	U	T	U				S																										Lindol (TCP)
S	U	F	U	S	S	S	F	T	T	S	S		S	T	S	S	S	U	S	S		S	S	S	S	S		S		S		U	S	S	S	Linseed oil
F	U	U	U	U	U	S	U	T	T	S	S		F			S	U		S			S	S	S	S	S		T				S	S	S	S	Liquid petroleium gas (LPG)
S	S		F	U	T	S		T							S	F							F	S	S				S			F	F	F		Lithium bromide
S	F		S	T		S	T			S			S		S	S	S	S		F		S	F	F	F	T		F	U	F		F	F	F	U	Magnesium carbonate 437
S	S	S	S	S	S	S	F	T	T	S	S	S	T	S	S	S	S	S	S	S		T	U	U	T	F		F	U	T	S	U	U	U	U	Magnesium chloride
S	S	S	S	U	S	S	F		U	S	S	U	S	S	S	S	S	S	S	F		S	S	S	S	T		S	U	F	S	F	S	F	U	Magnesium hydroxide
S	T		S		S	T										S						S	S	S	S	S		S					S	S	S	Magnesium oxide
S	S	S	S	U	S	S	F	T	T	S			S	S	S	S	S	S	S	F		F	S	F	S	F		S	F	F	F	T	T	T	F	Magnesium sulfate
S	S	S	S		S	S	S	S		S			S									S	U	T	T	S		U	F	U		U	U	U	F	Magnesium sulfite
S	S	S	S	S	S	S	S						S			S						S	F	S	S			S		U		F	F	U	S	Malt beverages
S	S		F	T	U	S	F			F	F	S		S	S	S	T			T			U			F		F		U	F	F				Manganese sulfate
S		S	S	S	S	S				S			S			S							F	S	S			S		U		F	F	U	S	Margarine
S	U	S	S	U	S	S				S			S			S	S					S	F	S	F			S		U		F	F	U	U	Mayonnaise
S	S	S	S	T	T	S	F	T		F	F	S	U	S	S	S	S	S		S		U	U	U	U	U		U	U	U	U	U	U	U	U	Mercuric chloride
F	T		F			T	F			S					S	S	S	S				F	U	U	F			U			F	U	U	U	U	Mercuric cyanide
S	S	S	S	T	S	S	T	U	T	U	U	F	S	S	S	S	S	S				S	S	S	S	U		U	U	S	S	U	U	U	U	Mercury
S		S	S		S	S							S			S								T	U			F		U		U	U	U	U	Mercury salts
U	T					U										S							T	F	F			U		F		U	U	U	F	Methallylamine
T				S	U								U		U	S							T	F	U	F		F		S	S	F	S	S	U	Methallyl chloride
S	U	T	F	U	U	S	U	U	T	S			F		S	S	T	U				S	S	S	S	S		S	S	S		S	S	S	S	Methane
																																				Methanol (see alcohol-methyl)
U	F	U	F	U	U	U	T	U	U	F	F		F	U	U	S	T					S	S		T	T				S		F			T	Methyl acetate
U	U	U	U	U	U	F	U	T	U	F	F	F	S	U	U	S	U	U	T	U		T	T	T	T	F		F		S	T	F	S	T	U	Methyl chloride
U	F	U	U	U	U	U	F	U	T	F	T		S	U	U	S	U	U	S	U	U	S	S	F	F	F		S	S	S		S	S	S	S	Methyl ethyl ketone (MEK)
U	U	U	U	U	U	F	U	F	U	S			U	U	U	S	T	U	S	U	U	F	T	T	T	S		F	T	F	T	T	U	S	U	Methylene chloride
S													S			S								S	S	S						S		S		MIL-F-5516
S													S			S								S	S	S						S		S		MIL-F-5572
S													S			S								S	S	S						S		S		MIL-F-5624
S						S																		S	S	S						S		S		MIL-F-25558
S	U		S	S		S							S			S								S	S	S						S		S		MIL-H-5606
S	U		S	S		S																	S	S	S	S						S		S	S	MIL-L-7808
S	S	S	S	U	S	S	U	T	F	S	F	S	S	U	S	S	F	S		S		S	S	S	S	U		U		S	S	U	U	U	S	Milk 474
S			S		S	U				U	T	S	S	S	S	S								U	F		F	S	T	U		U	U	U	F	Mine water (acid)
S	U		F	F	S	S	U	T	T	S			S	S	S	S	U	U	S	F		S	S	S	S	S		S	S	S	S	S		S	S	Mineral oil, USP
F	U		U		U	S				S							U							S	S	S						S		S	S	Mineral spirits
										U			U			S								F	F	U		U	U			U	U	U	U	Mixed acids (H_2SO_4 & HNO_3)
S	T	S	S	T	S	S	F	T	T	S	S	S	S		S	S	S	S	S			S	S	S	S	S		S		S	S	S	S	S	F	S	Molasses
S	U	S	T	T		S			T	S			T	S	S	S	U	U	S	S	S	S	S	S	S	S		S			S	S	S	S	S	Motor oil - sae #10, etc.
F	U	U	U	U	U	S	U	T	T	S		F	S	T	T	S	U	U	S			S	S	S	S	S		F		T	S	F	F	F	S	Naphtha
U	U	U	U	T	U	S	U	T	T	S			S		U	S	F	U	S			S	S	S	S	S		F	F	F		F	F	F	F	Naphthlene
F	U	U	U		U	S	U	T		U						S						T	T	F	T	S		T		T		F	U	F	F	Naphthenic acid
S	U	S	S	U	U	S	U	U	T	S			S		S	S	S	U				S	S	S	S	S		S		S		F		S	S	Natural gas
S	S	S	F	U	S	S	F	T	U	F	F	S	U	S	S	S	S	S	S	S		T	U	U	T			T	F	U	F	U	U	U	U	Nickel chloride
S	S		S		S	S	F			F			S		S	S	S	S	T	S		T	T	F	F			T			U	U	U	U	U	Nickel nitrate
S	S	S	S	S	S	S	F	T	U	F	F	S	U	S	S	S	S	S	S		F	U	T	F			T	F	U	F	T	T	T	U	Nickel sulfate
U	T	T	U	U	U	U	T	U	U	U	U	S	U	U	T	S	T	T	T		T		U	T	S	U		U	U	U	F	U	U	U	T	Nitric acid with 40% H_2O 493
U	T	U	U	U	U	F	T	T	U	U	U	S	U	U		S	T	T	S	U	T	S	U	T	T	U		U		U	T	U	U	U	U	Nitric acid vapors
U	U	U	U	U	U	U	U	U	U	U	U	S	U	U		S	S	U	T	U		T	U	T	T	U		U		U	F	U	U	U	T	Nitric acid (red ßuming)
										U	U		U	U									U	U	U			U	U	U		U	U	U	U	Nitric + HCL acids
													U										S	S	S					S		S				Nitriding gases
U	F	U	U	U	U	U	T	U	U	S	S	U	S	U	U	S	S		S	U		T	S	S	S	S		F	U	F		T	F	F	T	Nitrobenzene
U	T	U	U	U	U	U			U	F			U			S							F	F	F	U	U	U	U	U		U	U	U	T	Nitrogen tetroxide-dry
		S	S				T			U												T	S	F	F	T		F	U	S	S	F	F	F	S	Nitroglycerine
U	T	S				T				U			U			S	U	U				T	U	U	U			U	U		F	U	U	U	U	Nitrous acid
F	F	U	F	S	F	U	T	T		S			S			S	U	U				T	S	F	F	U		U			U	F	F	F	T	Nitrous oxide
																							S	S	S		S					S	S	S	S	Nyval (Mobil)
S	S		S	S	S	S	F	T	F	S	S		S	S		S	S	S	S			S	S	S	S	S					S	S	S	S	S	Nitrogen
S	U	U	S	S	U	S																	S	S	S	S						S	S	S	S	Oronite 8200
											S																	S								Oakite
F	U	U	T	T	T	S	U	S	T	F			S	S	S	S	F	U	F	F		T	F	F	S	S		F	U	F	T	T	T	T	T	Oleic acid
U		U	U							U			S		U	S	U						S	S			F								F	Oleum
S	F	U	S	S	S	S	T	T		S			T	U		S	S	T		S		S		S	S			S		S	S	T		S	S	Olive oil 514

Fluid resistance guide

CODES: S - SATISFACTORY F - FAIR U - UNSATISFACTORY T - TEST FOR SPECIFIC APPLICATION

RESILIENT MATERIALS																PLASTICS													METALS								
BUNA 'N' (NBR)	ETHYLENE PROPYLENE (EPDM)	HYPALON	NEOPRENE (CR)	URETHANE	SILICONE	VITON (FKM/FPM)	BUTYL	FLUOROSILICONE	HYTREL	CELCON	DELRIN	LEXAN	NYLON	POLYSULFONE	PVC	TEFLON	POLYPROPYLENE	POLYETHYLENE	POLYPHENYLENE SULFIDE	POLYCARBONATE	ULTEM	ST. ST. DIN 1.4435/1.4404	STEEL	ST. ST. AISI430	ST. ST. DIN 1.4301/1.4305/1.4542	SILVER	49 - NICKEL-IRON	MONEL	LEAD	IRON	INCONEL	COPPER	BRONZE	BRASS	ALUMINUM	
T	U		T	S	U	S	U	T	S														S	S	S	S						F	S	S	S	Oronite hydraulic fluid
F	S	T	F	T	F	U	F	T	U	U			S	S		S	S	T	S	T		T	U	T	T	F		T	U	U	S	T	F	T	T	Oxalic acid
										U													T	T	T			T	F	T		T	T	T	F	Oxidizing gases
U	T	T	S	T	T	S	F	T	F	U	U	T	T	T	T	T	U	U	S	T		S	S	S	S	F		S		S		S	S	S	S	Oxygen
U	S	S	T	S	S	T	F	S	U	U	U		U	T	T	S	U	U		T		F	U	F	F	F									F	Ozone
F			F	F		U	U						S	T	S	F						S	S		S			S					S	T	T	Paint, oil base
T			T		T								S			S												S								Paint vechicles (except soya)
S	U		U	T	T	S	U	T														S	S	S	S			S					S	T	S	Palm oil
F	F	U	U	T	U	F	T	T	T				U	S		S	F	T				S	S	S	S	T		F				F	F	U	S	Palmitic acid
S	U		U	F	T	S	U			F	F	S	S	S	S	S	T	U		T		S	S	S	S			S			S	S	S	S	S	Paraffin
S			S	F	T	S				F						S		U				S		S	S			S				S	S	S	S	Paraffin oil
S			S		F			F								S												T							S	Pencillin solution
F	U	F	S	U	U	S	U	U		S						S		U		S		F	F	F	F	S	F	S				F	F	F	S	Pentane
U	F	T	F	U	U	F	T	S	U	U	U		U	U		S	T	U	S	U		T	U	T	T			U		U		U	U	U	T	Perchloric acid
U	U	U	U	U	U	S	U	T	U	F	F		T	U	U	S	U	U	T	U	U	F	F	F	F	S		F	T	F	S	F	F	F	T	Perchloroethylene 539
S	U	T	T	T	T	S				S													S	S		S		S		S		S	S	S	S	Petroleum oils
				S																																Petroleum residue from distillation
U	U	U	U	U	T	F	F	T	U	U	U	S	U	U	T	S	U		S	U	U	T	U	F	S	S		F	F	T	T	F	S	F	T	Phenol
	S		F	F	F	F				U	U		T	U	U	S							S	S	S	S	S	S	S	S		F	S	S	F	Phosphate ester non-inflammable oils
T	F	S	T	T	U	S	F	T	U	U	U	S	U	S	S	S	S	T	S	T	T	T	U	U	T	F		U	T	U	S	U	U	U	T	Phosphoric acid (aerated)
T	F	S	T	T	T	S	F	T	U	U	U	S	U	S	S	S	S	T	S	F	T		U	U	T	F		T	T	U	T	T	T	T	U	Phosphoric acid (air free)
U										U						S	S	T				T	F		S			S	S	F		T	T	T	S	Phosphorous
	F		T			S				U	U	S	U			S	S						U	U	T			U	U	U		U	U	U	U	Phosphoric acid vapors
	T	U	U	U	U	U				U																										Pickling solution
F	F	S	S	T	T	U	U	T	U	U	T	F	S	S	S	S	T	T				F	U	F	S	S		U	T	U	U	U	U	U	U	Picric acid
F	U	U	U	S	U	S	U	S					S			S						S			S			S		S			U		S	Pine oil
S	S	U	F	U	U	U	F	U		F			T			S	T	T				F	S	F	F	S		F		S		F	F	F	U	Potassium acetate
S	S		S		S	S				S			S		S	S							U		S			F	F	U		F				Potassium aluminum sulfate
S	S		F	U	F	S	T	T		F			T		S	S	S	S				F	F	F	S			F	U	F		F	F	F	U	Potassium bicarbonate
S	S		S		S	S	T			S			T		S							T	U		U	S		U	F	U	U	F	U	U	F	Potassium bisulfate
S	S		S	U	S	S	T	T		T			T	S	S	S	S	S	S	T		F	U	U	F	U		F	F	U	S	F	F	F	U	Potassium bromide
S	S		S	U	S	S	F	T	U	F	F	U	U	S	S	S	S	S	S		T	T	F	F	S	F		F	U	T	S	U	U	U	U	Potassium carbonate
T	S		S	S	S	S	F			U	F	F	S	S	S	S	S	S	S			F	F	F	S	F		U			S	T	U	U	U	Potassium chlorate
S	S	S	S	S	S	S	F	T	T	S	F	F	U	F	S	S	S	S	S	T		F	T	T	T	U		F	U	T	F	F	F	T	U	Potassium chloride
S	S		T	T	S	S	T			U			S		S	S	S	S				F	T	F	F	F		F	F	F	S	F	S	F	F	Potassium chromates
S	S	S	S	S	S	S	S	S	T	U	U	F	S	F	S	S	S	S	S			F	S	S	S	U		F	U	T	F	U	U	U	U	Potassium cyanide
	S	S	S	S	S	S	F	T	T	U			T	S	S	S	S	S	S	T		T	F	F	F	S		F	F	F	S	F	F	F	F	Potassium dichromate
U	T		T			S	T			S			T		S	S	S	S				T	U	U	F	U		F	F	U	T	F	F	F	S	Potassium ferricyanide
S	S	S	F	U	T	T	F	U		S	F	F	F	F	S	S	T	F	T	U	S	T	T	F	S	F		F	U	T	S	T	T	U	U	Potassium hydroxide
F	S		F	T		U	U						T			S	U	U	S			T	T	U	U	U		U			U	U	U	U	U	Potassium hypochlorite
S	S	S	S	S	S	S	S	S	T	F	F	F	S	F	S	F	S	S	S	S		T	F	F	F	T		F	F	F	T	F	F	F	F	Potassium nitrate
U	S	S	S	U	S	S				U	S		U	S		S	S	S	S	S		F	F	S	S	U		F	U	F	F	F	F	F	F	Potassium permanganate
										U												F	T	T	F	U		F	U	U		U	U	U	U	Potassium peroxide
S	S		U	T		S	T			S			T			S	S	S				T	T	S	S	U		U	U	U		U	U	U	U	Potassium persulfate
S	S	F	S	S	S	S	S	S	T	S	F	F	S	S	S	S	S	S	S	T		T	S	S	S	F		F	F	U	S	F	F	U	S	Potassium sulfate
S	S		S	S	S	S	S						S			S	S	S	S				F	U	F	F	U		U			S	U	U	U	U	Potassium sulfide
F	S	F	S	S	S	S	F	T					T			S	S	S				T	T	U	T	S		U	F	U		F	F	U	U	Potassium sulfite
S	S	S	U	U	U	S	T	T	T	S			S			S						S		F	S	S		S				F	F	F	S	Prestone anti-freeze
S	U	F	F	S	F	S				F	F	F			S	S							S												S	Producer gas
S	U	S	U	U	U	S	U	T	T	S	S		S	U	S	S	U	U		U		S	S	S	S	S		S	S	S	S	S	S	S	S	Propane
U	S		U	U	T	U	T			U						F						T	T		F	S		T	U	U		T	T	T	T	Propionic acid
S	S	S	S		S	S				S					S		S						S	S	S	S		S		S		S	S	S	T	Propyl alcohol
U	U		U	U	U	S	U	T							U	S	U	U				T	T	S	T			S				S	S	F	U	Propylene dichloride
U	U		F	T	U	S	U	T					T			S	T		S			S	S	S	S	S	S	U	S	F	U	U	U	U	U	Pyranol (dielectric)
U	T	U	U	U	F	S	T	U	U				T			S		U		U		S	S	S	S	S	S	S	S	S		F	S	S	F	Pydraul (mansanto)
U	F	T	U	U	U	U	F	U	U	F	F	U	S	U	U	S		T	S			T	T	F	F			F	F	U		T	F	F	F	Pyridine
		T				U				U						S							F	F	F			S			F			F	F	Pyrogallic acid
F	S	U	U	U	U											S																S				Pyrogard (mobil) 5%
	F	U	U	U						U													T		F			T		U		T			F	Pyroligneous acid
																												(see Sodium thiosulfate)								Photo solution
U						F										S							S	S	S	S						S		S	S	Propylene
S	S		U	T	T	S	U	T		S				U		S	S	F		T	S	F	T	S	S	S		F			F	S	F	S	F	Propylene glycol
F			S			S							F			S							T	F	F			S		T	S	F	F	F	F	Rosin emulsion
F	T		F	U	T	T	F			F						S						T	T	F	F			F	F	T		F	F	F	F	Sacchrin solution
F	S		U		S	S				U			S		S	S	S	F		F		F	U	F	F	S		F	F	U	F	F	F	F	T	Salicylic acid
S	S	S	F	U	S	S	T	T	T	S	T	S	S	S	S	S	S	S				T	U	U	T			T			T	F	F	U	U	Sewage
T	S	S	U	U		U				F	F	U	S		U	S	T	T				S	S	S	S			S		S		S	S	S	S	Shellac

Back to overview

Fluid resistance guide

CODES: S - SATISFACTORY F - FAIR U - UNSATISFACTORY T - TEST FOR SPECIFIC APPLICATION

RESILIENT MATERIALS																PLASTICS									METALS								
BUNA 'N' (NBR)	ETHYLENE PROPYLENE (EPDM)	HYPALON	NEOPRENE (CR)	URETHANE	SILICONE	VITON (FKM/FPM)	BUTYL	FLUOROSILICONE	HYTREL	CELCON	DELRIN	LEXAN	NYLON	POLYSULFONE	PVC	TEFLON	POLYPROPYLENE	POLYETHYLENE	POLYPHENYLENE SULFIDE	POLYCARBONATE	ULTEM	ST. ST. DIN 1.4435/1.4404	STEEL	ST. ST. AISI430	ST. ST. DIN 1.4301/1.4305/1.4542	SILVER	49 - NICKEL-IRON	MONEL	LEAD	IRON	INCONEL	COPPER	BRONZE	BRASS	ALUMINUM	
S	S	S	S	S	U	S	S	S	T	S	S	S	T	S	S	S	S		T	S		S	S	S	S	S						S	S	S	S	Silicone oil
					S	S										S						T	U	T	S			F			T	U	U	U	U	Silver bromide
																S	F	F		S		U	U	U	U			F			T	T	T	U	U	Silver chloride 602
U	S	S	U	S	S	S	F	T		F	F	F	S	F	S	S	S	S	S	S		T	U	F	S			U	U	U	S	U	U	U	U	Silver nitrate
S		S		S	S	S				S	S	T	S	S	S	S	S						S	S	S			T	S	S		S	S	F	F	Soap (molten)
U	F	U	U	U	T	U	T	U	U					T				U			T	S	S	S	S	S						U	U	U	S	Skydrol
F	S					U				U	U	U			U	U						S	S	S	S			S			S	U	U	U	S	Sodium
F	S	U	F	U	U	U	T	U		S			S	S	S	S	S	S	S	F		T	U	F	S	F		T	T	T	S	F	F	F	S	Sodium acetate
S			S		S	S	T						S			S						S	T	F	S	T		S	U	S		S	F	U	U	Sodium aluminate
S	S	S	S	T	S	S	F	T	T	F	U	U	S	S	S	S	S	S	S	S		T	T	F	F	T		F	F	T	T	F	F	T	U	Sodium bicarbonate
													S		S	S							F	F	F							U	U	U	F	Sodium bichromate
S	F		S	T	S	S	F	T	U	F	F	S	U	S	S	S	S	S	S	T		T	T	T	T	F	S	T	F	U	F	T	T	U	U	Sodium bisulfate
S			S		S	S					S	S		S	S		S	S						U	S		S									Sodium bisulfate 10%
S	S		S	T	S	S	F	T	T	U	U		S		S	S	S	S		T		T	U	T	T	F	S	F	F	U	T	F	F	U	T	Sodium bisulfite
S	S	S	S	T	S	S	F	T	T	S			S	S		S	F	S	S	T		F	T	F	F	T		F			T	F	T	T	U	Sodium borate
S	T		T			T	T			S			F		S	F	S	S				T	U	U	T	U		F		U	F	T	T	T	S	Sodium bromide
S	S		S	T	S	S	F	T	T	S	S	U	S	S	S	S	S	S	S	S		T	F	F	F	S		F	T	F	S	F	F	U	U	Sodium carbonate (soda ash)
S	S	S	S	S	S	S	F	T	T	S	T		S	S	S	S	S	S	S	F		T	T	T	T	F		F	F	T	S	F	F	T	T	Sodium chloride
S			T		S	S	T			U			S	S		S	S		S	S		F	F	F	F	F		F		F		T	F	F	F	Sodium chromate
																S						T	T	F	F	U		F		U	F	U	T		U	Sodium citrate
S	S	S	S	S	S	S	F	T	T	F	F	S	S	S	S	S	S	S	S			T	F	S	F	U		T	U	F	F	U	U	U	U	Sodium cyanide
T	T	S	T	T	S	T	T	U					T		S	S	S	S	T			F	U	F	F			T			T	U	U	U	T	Sodium dichromate
S	S		T			S	T			S			T		S	F	S	S				T	F	F	F	U				F		U	U	U	T	Sodium ferricyanide
S	S		S	T	S	S	T			S			S		S	S	S	S				T	T	U	U	S		S		F	T	T	S	F	F	Sodium fluoride
T	S	S	T	S	S	T	T	T	U	S	U	F	S	S	S	S	F	F	T	T	T	T	T	F	F	S	S	T	U	T	S	U	T	T	U	Sodium hydroxide (caustic soda)
U	F	T	U	U	T	S	T	T	T	U	U		U	S	T	S	F	F	S	T		T	U	U	U	F		U	U	U	T	U	U	U	U	Sodium hypochlorite
																S							U	U	F			S			F	U	U	U	U	Sodium hyposulfite
S	S	F	F	T	T	S	T	T		F	F	S	T	F	F	S	T	T				S	U	F	F	S		T				F	F	U	U	Sodium metaphosphate
S	S		S	T	S	S	F			F	F	S	F	S	S	F						S	F	F	F	S		F		F	S	F	F	F	T	Sodium metasilicate 563
F	S	S	F	T	U	S	F		T	S	F	S	S	F	S	S	S	S	S			T	T	F	T	F		F	U	F	S	T	T	U	F	Sodium nitrate
S	S		T		S	S	T			S			S		S	S	S	S				F	F	F	F	T		S		F		F	F	F	F	Sodium nitrite
F	S	F	F	T	S	S	F	T	T	F	F	S	T	F	S	S	S	T				F	F	F	F	U		F	U	F	S	F	T	U	U	Sodium perborate
T	S	S	T	U	U	S	S	T	T	U	U		T		S	S	F	F		S		S	U	T	F	U		F	U	F	S	U	U	U	U	Sodium peroxide
																						S	U	S	S	S				S		T	T		U	Sodium phenolate
S	S	S	F	S	U	S	T	T	T	F	F	S	U	S	S	F	S	S				F	F	F	F	S		F		F	T	F	F	F	U	Sodium phosphate
F	S	S	U	S	T	S	T	T	T				T			S	S	S				F	F	F	F	F		F	U	F	S	F	T	T	U	Sodium phosphate (tri-basic)
T				T		T	T						T									F	F	F	F			F		F	S				U	Sodium plumbite
S			S		S		S			S			S			S						F	F		F			F								Sodium resinate 642
																						F	U	F	F	T		F		F		T		T	T	Sodium salicylate
S	S	S	S	F	S	S	T		T	S	S	S	S	S	S	S	S	S	S			S	T	F	F	F		F	U	F	S	F	F	F	U	Sodium silicate
S	S	S	S	S	S	S	F	T	T	S	S	S	S	S	S	S	S	S	S	S		T	T	T	T	S		F	F	F	F	F	F	T	S	Sodium sulfate
F	S	S	S	S	S	S	T	T	T	S	S	S	S	S	S	S	S	S	S	U		T	T	U	S	U		F	F	U	S	U	U	U	U	Sodium sulfide
S	S	S	S	S	S					S	S	S	S	S	S	S							F	T	F			F	F	U	T	T	F	U	F	Sodium sulfite
S	T		S	T	S	S	F		T	U	U		S	S		S	F	S	S	T		F	F	T	F			F		F	F	F	T	T	U	Sodium tetraborate
F	S		T	T	F	S	F	T	T		T		S																					U		Sodium thiophosphate (aeroßoat)
F	S	S	S	S	S	S	F			T	T	S	S	U	S	S	S	F	S	S		S	U	T	F	U		F			F	U	U	U	F	Sodium thiosulfate
S			S	S	S	S							S			S																				Solvac (socony)
S	U	F	F	F	U	S	U	T					S			S																				Sovasol #1
S	U	F	F	F	U	S	U	T					S			S																				Sovasol #2
S	U	F	F	F	U	S	U	T					S			S																				Sovasol #3
S	U	F	F	F	U	S	U	T					S			S																				Sovasol #73
S	U	F	F	F	U	S	U	T					S			S																				Sovasol #74
S	S	U	U	T	T	S	F	T	T	F		S	U	S	S	S	S	S	S			T	T	U	U	T		T			U	U	U	U	U	Stannic chloride
F	U	S	S	U	F	T	F	T	T	F			U			S	S	F	T	T		T	T	U	U			T	U	T	F	U	U	U	U	Stannous chloride
S	F	S	S	T	S	S			T	F	F	S	S	S	S	S	S	F	S			S	S	F	S	S		S		T		S	T		S	Starch
U	T	U	U	U	U	T	T	U	U	U	U	U	U	T	U	T	U	U	T	U		S	F	S	S	F		F		F	S	F	S	F	T	Steam
S	S		S	U	U	U		U		T																		F						S		Steam condensate 663
F	F		S	T	S	T	T	U	T	F			S	U	S	S	S	S		F		T	T	T	T	S	S	F	U	U		U	U	U	U	Stearic acid
S	U	U	F	S	U	S								S	U		S		S					S	S								S	S		Stoddards solvent
	F			T						F	F	S		S	S	T						F	U	F	F	F		F		U		F	F	F	F	Stronitium nitrate
U	U	T	U	U	U	T				S						S							S	S	S			S				F	F	F		Styrene 666
T	T					T				U			T			S	T					F	F		U	F						F	F	F	T	Succinic acid
																																				Sul (dil)
T	F		F		T	S	T	T	U				U			S	T	S				F	U	F	T		S	S		S		U	U	U	U	Sulfate liquor
U	S		U	T	S	S	T	T	F	S			S		S	S	S	S	S	T		T	T	F	F	U		T	U	T	S	U	U	T	S	Sulfur
U	U	U	U	U	U	S	U	T	U	U	U		U	T	S	S	U	U		U		T	U	T	T	U		U	F	U	F	U	U	U	U	Sulfur chloride
U	S		F	U	F	S	F	F	U	F			U	U	U	S	T	T	S	T		T	T	T	T	T		T	F	T	U	T	T	T	F	Sulfur dioxide

Fluid resistance guide

CODES: S - SATISFACTORY F - FAIR U - UNSATISFACTORY T - TEST FOR SPECIFIC APPLICATION

RESILIENT MATERIALS												PLASTICS														METALS								
BUNA 'N' (NBR)	ETHYLENE PROPYLENE (EPDM)	HYPALON	NEOPRENE (CR)	URETHANE	SILICONE	VITON (FKM/FPM)	BUTYL	FLUOROSILICONE	HYTREL	CELCON	DELRIN	LEXAN	NYLON	POLYSULFONE	PVC	TEFLON	POLYPROPYLENE	POLYETHYLENE	POLYPHENYLENE SULFIDE	POLYCARBONATE	ULTEM	ST. ST. DIN 1.4435/1.4404	STEEL	ST. ST. AISI430	ST. ST. DIN 1.4301/1.4305/1.4542	SILVER	49.- NICKEL-IRON	MONEL	LEAD	IRON	INCONEL	COPPER	BRONZE	BRASS	ALUMINUM	
T	S		F	S	U	U	T	T	T		S		T			S							T	T	S	T					S	S		S		Sulfur hexaßuoride
	U					S											T					F	F	F	F	U		F		F		F	F	F	F	Sulfur oils
U	F	U	U	T	F	S	U	T	U	U			S			S	U	U				T	T	T	T	U		F	F	T		T	T	T	F	Sulfur trioxide dry
T	T	T	U	U	U	S	T	U	T	U	U	S	U	U	T	S	T	T	T	T	T	T	T	T	T	T		U	U	U	U	U	U	U	U	Sulfuric acid
T	F	S	T	U	U	S	F		U	U	U	S	U	U	S	S	S	S	S			T	U	U	U	F		U	F	U	U	U	U	U	T	Sulfurous acid
S	T	S	S		T					F	F	S	S	F	F	S								S				S		F		F		F	S	Soybean oil
T	U		U	T	T	S				S	S		S	T	U	S	T	T	S			S	S	S	S	S						S		S	S	(Synthetic lubricant -diester type)
S			S		S					S			S			S												S								Talc slurry
S	U	F	U	T	U	S	U	T							S	F	S	F				T	U	U	T			F		U	T	U		U	U	Tall oil
S	F		S		S	S				F	F	T	S		S	S												S		S						Tallow, molten
T	S		T	F	S	S	T	F	T	U			S	S	S	S	S	S	S	U		T	T	F	F	S		F		F	F	T	T	T	T	Tannic acid 686
T	U	U	T		U	F				F	F	F	S		S	S							S	F	S			S		S	S	S	S	F	S	Tar
																																				Water (see types below)
S	S		S	T	S	S		T					S			S								S	S			S				F	F	F	F	Carbonated
T	S	S	F			S	F			S	S		S	S	S	S	S	S	S		T	S	U	S	S	S		S	U	U	S	T	T	T	S	Distilled, demineralized, deionized
S	S	S	T	T	S	S	T	S	T	S	S		S	S	S	S	S	S	S	S		S	T	S	S	S		S		U	S	S	S	F	F	Fresh
T	S		U	U	U	U		T		S			T			S						S	T	S	S	S		S			S	F	F	T	F	Boiler feed
S	S		T	U	S	T				S			T			S							T	S	S	S						F	F	T	F	Return condensate
T	T		T	U	T	S	F									S		S	S			F	T	F	F	S		S	S	U	S	S	S	U	U	Brackish
S	S	S	S	U	F	S	F	T	T	S	S	F	S	S	S	S	S	S	S			U	U	U	T	S	U	S	S	U	F	F	S	U	U	Sea
			S							S				S	S													S							S	Wax molten
T	T	T	U	U	S	T		T		S	S	F	S	S	S	S	S	U				S	U	F	F			S		U		S	T	F	U	Whiskey and wines
T	T	T	T	U	S	T	F	T	T	S	S	F	S	S	S	S	S	S		T		S	U	S	S			U			S	F	F	F	T	Wine
S	S		U	U	T	S	F	T					T			S						S	S	S	S							U	T	T	S	Xanthates
			S							S			S			F								S	S										X-ray development solution
U	U	U	U	U	U	U				S	S	U	S	S	U	S	U	U					S	S	F		S	S		S		S	S	S	F	Xlol (dry & no alkalies)
U	U	U	U	T	U	F	U	T	U	S	S	U	S	U	T	S	U	U	S	U	U	S	F	S	S	S		S			S	S	S	S	S	Xylene
T	S	S	T	T	S	S	F	T	T	F	S	F	U	S	S	S	S	S	S	S	T	T	T	U	U	F		T	T	T	F	U	U	U	U	Zinc chloride
S	S	S	S	T	S	S	F	T	U		S	F	U	S	S	S	S	S		S		T	U	T	F	S		T	F	U	F	T	T	U	U	Zinc sulfate
T	U	S	T	T	S	F	F	T	T	U			S	S	S	S	S	F	S	T		T	U	T	T	S		T	U	U	S	T	T	U	T	Tartaric acid
		S																																		Tetrabutyl titrate
	U	U	U	U	U																		T	S	S	S						S	S	S	T	Tetrachloroethylene
U	U	U	U	U	U	U	U	T	U	U	S		T	U		S	U	S	S	U		S													F	Tetrahydrofuran
											U	U				S			S			T	U	U	T			U	U	U		U	U	U	U	Tetraphosphoric acid
											U											U	U	U	U					U		U	U	U		Tin ammonium chloride
S	T										U	S	U			U	S						S		U			T		U						Tin tetrachloride
S																F						T	U	T	F			T	F	U		T	T	U	U	Titanium sulfate
U	U	U	U	U	U	S	U	T								S	U	U		S		T	T	T	T			T				T	T	U	U	Titanium tetrachloride
U	U	U	U	T	U	S	U	T	U	F	F		S	U	U	S	U	U	S	U	U	S	S	S	S	S		S	S	S	S	S	S	S	S	Toluene (Toluol)
S										S													S	S	S	S						S		S	S	Transmission fluid (type A)
U	U	U	U	U	U	U	T	U	U	F	F	F	F		U	S	F	U				S	S		S											Tributyl phosphate
U	F	U	U	U	T	U	T	U	U	U			U			S	F	U	S	T		U	U	U	U			T	U	U	T	U	U	U	U	Trichloroacetic acid
U	U	U	U	U	U	F	U	U	U	S	F	U	U	U	U	S	U	U	S	U		T	T	F	F			F	U	T	S	T	T	T	F	Trichloroethylene
S			S	S		S	U									S						S	T		S	T		S		S		F	S	S		Trichloropropane
U	S	U	U	U	U	S	F	T	U				T			S	F	T	S			S	S	S	S							S	S	S	U	Tricresyl phosphate
			F							T						S							U	U	U			U	U	U		U	U	U	U	Trifluoroacetic acid
S			S		S					S			S			S	S						S	F	F	F		F	U	S		T			U	Trisodium phosphate
S	U	T	S	U	U	T	U	T	T				S			S	S					S	F		S			T			T	T	T	T	S	Tung oil
						S																														Turco # 2976
		T																																		Turco oil # 15
S	U	U	T	U	U	F	U	T	T	S			S	U		S	U	U	T	U		S	F	F	F	S		F	F	F	S	F	F	F	F	Turpentine
U	S		U		U	U							S			S							S		S			S		U		U	U	U	S	Udmh (Hydrazine)
F	F	S	S	T	S	F	F		T	S	T	F	S	F	S	S	S	S	S	U		T	T	F	F	S		T	S	F		T	S	T	F	Urea
					T	T										S						T	S		T		T	S				T	T	T	S	Uranium hexafluoride
																								S	S											Vanadium pentoxide
F	U	U	U	U	U	T	U	T					S	U	U	S	T	U				S	T	T	S			S		T	S	S	T	F	S	Varnish
S			S			S										S						F		F	F	F						F	F	F		Varsol # 1 & # 2 (mineral spirits)
F	S	S	U	T	S	S	F	T		F	F	S	S	S	S	S						S	S	F	S			F			S			U	S	Vegetable oils
T	S	S	T	U	S	S	T	U	T		F	T	T	S		S	S	S	S	S		S	U	F	F	S		S		T	S	F	F	U	T	Vinegar
	T	U	S	S			U			S						S						T	T	T	T	S		F	U	T	T	U	U	U	T	Vinyl chloride

Conversion of pressure units

	bar	mbar	Pa N/m²	kPa kN/m²	MPa MN/m²	at kp/cm²	atm	mmWS mmCE	mWS mCE	Torr mm Hg	psi lbf/in²
1 bar	1	1000	10^5	100	0.1	1.02	0.987	$1.02 \cdot 10^4$	10.2	750	14.5
1 mbar	0.001	1	100	0.1	10^{-4}	$1.02 \cdot 10^{-3}$	$0.987 \cdot 10^{-3}$	10.2	0.0102	0.75	0.0145
1 Pa 1 N/m²	10^{-5}	0.01	1	0.001	10^{-6}	$1.02 \cdot 10^{-5}$	$0.987 \cdot 10^{-5}$	0.102	$1.02 \cdot 10^{-4}$	0.0075	$1.45 \cdot 10^{-4}$
1 kPa 1 kN/m²	0.01	10	1000	1	0.001	0.0102	$9.87 \cdot 10^{-3}$	102	0.102	7.5	0.145
1 MPa 1 MN/m²	10	10^4	10^6	1000	1	10.2	9.87	$1.02 \cdot 10^5$	102	7500	145
1 at 1 kp/cm²	0.981	981	$0.981 \cdot 10^5$	98.1	0.0981	1	0.968	10^4	10	736	14.22
1 atm	1.013	1013	$1.013 \cdot 10^5$	101.3	0.1013	1.033	1	$1.033 \cdot 10^4$	10.332	760	14.696
1 mmWS 1mmCE	$0.981 \cdot 10^{-4}$	0.098	9.807	$9.81 \cdot 10^{-3}$	$9.81 \cdot 10^{-6}$	10^{-4}	$0.968 \cdot 10^{-4}$	1	0.001	0.0736	$1.422 \cdot 10^{-3}$
1 mWS 1mCE	0.0981	98.07	9807	9.81	$9.81 \cdot 10^{-3}$	0.1	0.0968	1000	1	73.6	1.422
1 Torr 1 mmHg	$1.133 \cdot 10^{-3}$	1.333	133.323	0.133	$1.333 \cdot 10^{-4}$	$1.36 \cdot 10^{-3}$	$1.316 \cdot 10^{-3}$	13.595	$1.359 \cdot 10^{-2}$	1	$1.934 \cdot 10^{-2}$
1 psi 1 lbf/in²	$6.895 \cdot 10^{-2}$	68.95	6895	6.895	$6.895 \cdot 10^{-3}$	$7.031 \cdot 10^{-2}$	0.06805	703.1	0.7031	51.7	1

Conversion of temperature units

[°F] to [°C]
Formula: °C = 5/9·(°F –32)

°F	°C	°F	°C	°F	°C
–100	–73.3	105	40.6	315	157.2
–95	–70.6	110	43.3	320	160.0
–90	–67.8	115	46.1	325	162.8
–85	–65.0	120	48.9	330	165.6
–80	–62.2	125	51.7	335	168.3
–75	–59.4	130	54.4	340	171.1
–70	–56.7	135	57.2	345	173.9
–65	–53.9	140	60.0	350	176.7
–60	–51.1	145	62.8	355	179.4
–55	–48.3	150	65.6	360	182.2
–50	–45.6	155	68.3	365	185.0
–45	–42.8	160	71.1	370	187.8
–40	–40.0	165	73.9	375	190.6
–35	–37.2	170	76.7	380	193.3
–30	–34.4	175	79.4	385	196.1
–25	–31.7	180	82.2	390	198.9
–20	–28.9	185	85.0	395	201.7
–15	–26.1	190	87.8	400	204.4
–10	–23.3	195	90.6	405	207.2
–5	–20.6	200	93.3	410	210.0
0	–17.8	205	96.1	415	212.8
5	–15.0	210	98.9	420	215.6
10	–12.2	215	101.7	425	218.3
15	–9.4	220	104.4	430	221.1
20	–6.7	225	107.2	435	223.9
25	–3.9	230	110.0	440	226.7
30	–1.1	235	112.8	445	229.4
32	0	240	115.6	450	232.2
35	1.7	245	118.3	455	235.0
40	4.4	250	121.1	460	237.8
45	7.2	255	123.9	465	240.6
50	10.0	260	126.7	470	243.3
55	12.8	265	129.4	475	246.1
60	15.6	270	132.2	480	248.9
65	18.3	275	135.0	485	251.7
70	21.1	280	137.8	490	254.4
75	23.9	285	140.6	495	257.2
80	26.7	290	143.3	500	260.0
85	29.4	295	146.1	505	262.8
90	32.2	300	148.9	510	265.6
95	35.0	305	151.7	515	268.3
100	37.8	310	154.4	520	271.1

[°C] to [°F]
Formula: °F = 9/5·(°C +32)

°C	°F	°C	°F	°C	°F
–100	–148	105	221	315	599
–95	–139	110	230	320	608
–90	–130	115	239	325	617
–85	–121	120	248	330	626
–80	–112	125	257	335	635
–75	–103	130	266	340	644
–70	–94	135	275	345	653
–65	–85	140	284	350	662
–60	–76	145	293	355	671
–55	–67	150	302	360	680
–50	–58	155	311	365	689
–45	–49	160	320	370	698
–40	–40	165	329	375	707
–35	–31	170	338	380	716
–30	–22	175	347	385	725
–25	–13	180	356	390	734
–20	–4	185	365	395	743
–15	5	190	374	400	752
–10	14	195	383	405	761
–5	23	200	392	410	770
0	32	205	401	415	779
5	41	210	410	420	788
10	50	215	419	425	797
15	59	220	428	430	806
20	68	225	437	435	815
25	77	230	446	440	824
30	86	235	455	445	833
32	89.6	240	464	450	842
35	95	245	473	455	851
40	104	250	482	460	860
45	113	255	491	465	869
50	122	260	500	470	878
55	131	265	509	475	887
60	140	270	518	480	896
65	149	275	527	485	905
70	158	280	536	490	914
75	167	285	545	495	923
80	176	290	554	500	932
85	185	295	563	505	941
90	194	300	572	510	950
95	203	305	581	515	959
100	212	310	590	520	968

Trafag international

Europe

Headquarters, Switzerland
Trafag AG
Industriestrasse 11
CH - 8608 Bubikon
Tel. +41 44 922 32 32
www.trafag.com
e-mail: trafag@trafag.com

Austria
Trafag GmbH
Konrad-Doppelmayr-Strasse 17
AT - 6922 Wolfurt
Tel. +43 5574 20866
www.trafag.at
e-mail: trafagat@trafag.com

Belgium
Marktechnical B.V.B.A.
Boxtelstraat 11
BE - 2320 Hoogstraten
Tel. +32 3 311 8864
www.marktechnical.be
e-mail: info@marktechnical.be

Croatia
Albania, Bosnia-Herzegovina, Macedonia, Montenegro, Serbia, Slovenia
VARGA ELEKTRONIK d.o.o.
Draškovićeva 12
Draškovec
HR - 40323 Prelog
Tel. +385 40 643 189
www.varga-elektronik.hr
e-mail: info@varga-elektronik.hr

Cyprus
ACTech Ltd.
60 Mesologiou Str, 185-45
GR - Piraeus
Tel. +30 210 4630 825
www.actech.gr
e-mail: actech1@otenet.gr

Czech Republic
Trafag spol. s r.o.
Vilémovská 2129
CZ - 347 01 Tachov
Tel. +420 374 723 250
www.trafag.cz
e-mail: trafagcz@trafag.com

Denmark
OEM Automatic Klitsø A/S
Engholm Parkvej 4
DK - 3450 Allerød
Tel. +45 70 10 64 00
www.oemklitso.dk
e-mail: info@oemklitso.dk

Estonia, Latvia
Wermundsen OÜ
Mustamäe tee 55
EE - 10620 Tallinn
Tel. +372 601 4202
www.wermundsen.ee
e-mail: wermundsen@wermundsen.ee

Finland
Wexon OY
Turvekuja 6
FI - 00700 Helsinki
Tel. +358 9 290 440
www.wexon.com
e-mail: wexon@wexon.com

France
Trafag S.A.R.L.
2 Boulevard Westinghouse
FR - 93270 Sevran
Tel. +33 1 4863 0101
www.trafag.fr
e-mail: trafagfr@trafag.com

Germany
Trafag GmbH
Kelterstrasse 59
DE - 72669 Unterensingen
Tel. +49 7022 40590-0
www.trafag.de
e-mail: info@trafag.de

Great Britain
Trafag (UK) Ltd.
Unit 6 First Quarter
Blenheim Rd
GB - Epsom, KT19 9QN
Tel. +44 (0) 203 968 0020
www.trafag.co.uk
e-mail: enquiries.uk@trafag.com

Greece
ACTech Ltd.
60 Mesologiou Str, 185-45
GR - Piraeus
Tel. +30 210 4630 825
www.actech.gr
e-mail: actech1@otenet.gr

Hungary
OEM Automatic Kft.
Gyár u.2.
HU - 2040 Budaörs
Tel. +36 23 880 895
www.oemautomatic.hu
e-mail: info@oemautomatic.hu

Iceland
Samey ehf.
Lyngas 13
IS - 210 Gardabaer
Tel. +354 510 5200
www.samey.is
e-mail: sala@samey.is

Italy
Trafag Italia S.r.l.
c/o Tecnocity Altomilanese
Via Cremona, 1
IT - 20025 Legnano (MI)
Tel. +39 0 331 592 397
www.trafagitalia.com
e-mail: info.it@trafag.com

Lithuania
UAB Auregis
Savanorių pr. 271
Mituvos g. 2
LT - Kaunas 50131
Tel. +370 37 313426
www.auregis.lt
e-mail: info@auregis.lt

Netherlands
Marktechnical B.V.
Lage Ham 172-178
P.O. Box 324 / 5100 AH Dongen
NL - 5102 AE Dongen
Tel. +31 162 31 42 85
www.marktechnical.nl
e-mail: info@marktechnical.nl

Trafag international

Europe

Norway
Stork AS
Brynsveien 100
NO - 1352 Kolsas
Tel. +47 67 17 64 00
www.stork.no
e-mail: stork@stork.no

Poland
POLTRAF Sp. z o. o.
ul.Bysewska 26C
PL - 80-298 Gdańsk
Tel. +48 58 557 52 07
Tel. +48 58 557 52 23
www.poltraf.com
e-mail: info@poltraf.com.pl

Portugal
Trafag España S.L.
Parque Tecnológico Bizkaia
Edificio 101 – E
ES - 48170 Zamudio (Bizkaia)
Tel. +34 94 641 40 63
www.trafag.es
e-mail: info@trafag.es

Romania
Synchro Comp s.r.l.
ID Sarbu street no. 13 Camin 3
RO - Craiova 200561 Dolj
Tel. +40 317 800 000
www.synchro.ro
e-mail: office@synchro.ro

Russia
Ltd. POLTRAF CIS
Naberegnaya Obvodnogo Kanala
199-201, lit "P"
RU - 196105 St.-Petersburg
Tel. +7 812 244 94 24
www.poltraf.ru
e-mail: info@poltraf.ru

Slovakia
Trafag spol. s r.o.
Vilémovská 2129
CZ - 347 01 Tachov
Tel. +420 374 723 250
www.trafag.cz
e-mail: trafagcz@trafag.com

Spain
Trafag España S.L.
Parque Tecnológico Bizkaia
Edificio 101 – E
ES - 48170 Zamudio (Bizkaia)
Tel. +34 94 641 40 63
www.trafag.es
e-mail: info@trafag.es

Sweden
Regal Components AB
Lefflersgatan 1
SE - 754 50 Uppsala
Tel. +46 18 657 000
www.regal.se
e-mail: info@regal.se

Switzerland
see 'Headquarters'
Tel. +41 44 922 32 32
www.trafag.com
e-mail: trafag@trafag.com

Turkey
Alfa Elektronik Sensor Sanayi Ve Ticaret A.S.
Tuzla Kimya Sanayicileri O.S.B
Melek Aras Bulvari No: 67
TR - 34956 Tuzla-ISTANBUL
Tel. +90 216 399 44 04
www.alfasanayi.com
www.trafag.com.tr
e-mail: info@alfasanayi.com

Ukraine
Soliton Ltd.
19, Akademika Tupoleva str
UA - 04128 Kiew
Tel. +38 (044) 223 9843
www.soliton.com.ua
e-mail: soliton@soliton.com.ua

Trafag international

Asia

China
Shipbuilding:
Marinequip China Co., Ltd.
Room 1306A, 13.F, Jiaxing Building
877 Dong Fang Road
CN - Shanghai 200122
Tel. +86 21 6445 2545
e-mail: xuzhun@marinequip.com.cn

Engines:
Shanghai SKY Trading Co., Ltd.
Bond Shanghai Office
Rm. 24D, Unit.2,
No. 1251 Jiangning Rd
CN - Shanghai 200060
Tel: +86 21 6276 1312
www.sky-trading.com.cn
e-mail: bondwu@sky-trading.com.cn

Main agent:
Beijing Macrocontrol Co., Ltd
Room 3-17B, 17th Floor, Building 3,
No. 2 Dajiaotingzhongjie,
Chaoyang District,
CN - Beijing 100025
Tel. +86 10 8260 1626/8260 1361
www.macrosense.cn
e-mail: wanggui@macrosense.cn

SF_6 Gas Density Monitoring:
ETIC Electrical Equipment Co., Ltd.
A610 Pioneering Square,
No. 48 Keji Road,
CN - Xi'an 710075
Tel. +86 29 8799 9981/2/3
www.etic.cn
e-mail: info@etic.cn

Shipbuilding:
Shanghai Ruiye Electronic and
Technology Co., Ltd
Room 902, Jingtai Mansion, No. 628
Zhoujiazui Road
CN - Shanghai 200082
Tel. +86 21 5294 8988
www.rydm.net
e-mail: lydia@rydm.net

India
Trafag Controls India Pvt. Ltd.
Plot no-248, Sector-7
IMT Manesar
IN - Gurgaon-122050,
Haryana
Tel. +91 124 404 47 20
www.trafag.com
e-mail: trafagindia@trafag.com

Indonesia
General Industry:
Please contact our headquarters
Switzerland
Tel. +41 44 922 32 32
www.trafag.com
e-mail: trafag@trafag.com

Indonesia
SF_6 High Voltage Industry:
PT. HIGH VOLT TECHNOLOGY
Graha Mas Pemuda AD-7
Jln. Pemuda, Rawamangun
ID-Jakarta Timur, 13220
Tel. +62 21 4711898, 4711884
www.highvolt-technology.com
e-mail: sales@highvolt-technology.com

Japan
Trafag Japan Co., Ltd.
2-13-5 Shiba Daimon
Minato-ku
JP - Tokyo 105-0012
Tel. +81 3 6435 7506
www.trafag.jp
e-mail: trafagjapan@trafag.com

Korea
Engines, Shipbuilding:
Hwajin Enterprise Co., Ltd.
25, Mieumsandan 2-ro
Gangseo-gu
KR - Busan (46748)
Tel. +82 51 831 9447
www.trafagkorea.com
e-mail: hwa-jin@hwa-jin.com

Korea
General Industry:
GMS-Korea Co., Ltd
#101-308, Digital Empire II,
Shinwon-ro 88, Yeongtong-gu
KR - Suwon-city, Gyeonggi-do
Tel. +82 31 243 10 35
www.www.gms-korea.com
e-mail: sales@gms-korea.com

Malaysia
General Industry:
ESEAN Engineering SDN BHD
No 9, Jalan TKK 2/2
Taman Puncak Kinrara
MY - 47180, Puchong, Selangor
Tel. +603 8070 1803
www.ese.com.my
e-mail: sales@ese.com.my

Malaysia
SF_6 High Voltage Industry:
LIANEQUIP Sdn Bhd
C-37-3, Block C, 3rd Floor,
Jaya One, No 72A Jln Universiti
MY - 46200 Petaling Jaya, Selangor
Tel. +603 7956 7652
www.lianequip.com
e-mail: lianeq2014@gmail.com

Philippines
General Industry:
West Point Engineering Supplies
West Point Building, Bacood Street,
Barangay Patubig
Marilao Bulacan
Philippines 3019
Tel. +63 44 797 2524
www.westpointengineering.com.ph
sales@westpointengineering.com.ph

Philippines
SF_6 High Voltage Industry:
KVAR CORPORATION
No. 7 Villanueva Drive cor.,
Commonwealth Ave.
Old Balara 1119 Quezon City
Metro Manila
Tel. +632 921 86 99
www.kvar.com.ph
e-mail: admin@kvar.com.ph

Singapore
General Industry:
Please contact our headquarters
Switzerland
Tel. +41 44 922 32 32
www.trafag.com
e-mail: trafag@trafag.com

Trafag international

Asia

Singapore
Shipbuilding:
Bond Instrumentation (S) Pte. Ltd.
8 Gul Street 3
SG - Singapore 629265
Tel. +65 68 651 800
www.bond.com.sg
e-mail: bondsales@bond.com.sg

Taiwan
Daybreak International (Taiwan) Corp.
3F, No. 124, Chung-Cheng Road,
Shihlin 11145
TW - Taipei
Tel. +886 2 8866 1234
www.daybreak.com.tw
e-mail: day111@ms23.hinet.net

Thailand
General Industry:
Themtech Co., Ltd.
127 Soi Srimuang Anusorn
Sutthisarnvinijchai Rd., Dindaeng
TH - Bangkok 10400
Tel. +662 693 6767/693 6629
www.primusthai.com
e-mail: sales@themtech.co.th

Thailand
SF_6 High Voltage Industry:
PACIFIC POWER TECHNOLOGY CO., LTD.
61/1 Soi Pattanakarn 54,
Pattanakarn Rd.,
Suanluang, Suanluang,
TH-Bangkok, 10250
Tel. +66 2320 0462-5
surasakpare@gmail.com

United Arab Emirates
Abdulla Bin Hamid Trading LLC
Po Box 30495
AE - Dubai
Tel. +971 4 2241464
www.accutech.ae
e-mail: sales@accutech.ae

Vietnam
GNN Co. Ltd
33 Hoa Hong 2, Ward 2
Nhu Nhuan Dist. HCMC
Tel. +84 8 3517 4923
www.gnnvietnam.com
e-mail: contact@gnnvietnam.com

America

USA
Trafag, Inc.
8848 Red Oak Boulevard, Suite I
US - Charlotte, NC 28217
Tel. +1 704 343 6339
www.trafag.us
e-mail: salesus@trafag.com

Canada
Indumart Inc.
25 Denison Street
CA - Markham, L3R 1B5,
Ontario
Tel. +1 905 944 9998
www.indumart.com
e-mail: sales@indumart.com

South America

Entire South America:
Trafag España S.L.
Parque Tecnológico Bizkaia
Edificio 101 – E
ES - 48170 Zamudio (Bizkaia)
Tel. +34 94 641 40 63
www.trafag.es
e-mail: info@trafag.es

Africa

South Africa
ICS (Pty) Ltd.
Instrumentation & Control Systems
1 Claerhout Crescent
ZA - Sasolburg, 1947 RSA
Tel. +27 82 900 83 12
www.instcon.co.za
e-mail: info@instcon.co.za

Australia, Oceania

Australia
Dart Instruments Pty. Ltd.
Unit 8, 15-17 Chaplin Drive
AU - Lane Cove NSW 2066
Tel. +61 2 9651 4220
www.dartinstruments.com.au
e-mail: sales@dartinstruments.com.au

New Zealand
Eurotec Limited
750C Great South Road
Penrose
P.O. Box 14543
NZ - Panmure Auckland
Tel. +64 9 579 1990
www.eurotec.co.nz
e-mail: sales@eurotec.co.

Reliable quality

Worldwide represented, globally trusted, Swiss based

Headquarters
Switzerland

Subsidiaries
Austria
Czech Republic
France
Germany
Great Britain
India
Italy
Japan
Poland (Joint Venture)
Russia (Joint Venture)
Spain
USA

Representatives
Australia
Belgium
Brazil
Canada
China
Colombia
Croatia
Cyprus
Denmark
Estonia
Finland
Greece
Hungary
Iceland
Indonesia
Israel
Korea
Malaysia
Netherlands
New Zealand
Norway
Philippines
Portugal
Romania
Singapore
South Africa
Sweden
Taiwan
Thailand
Turkey
Ukraine
United Arab Emirates
Vietnam

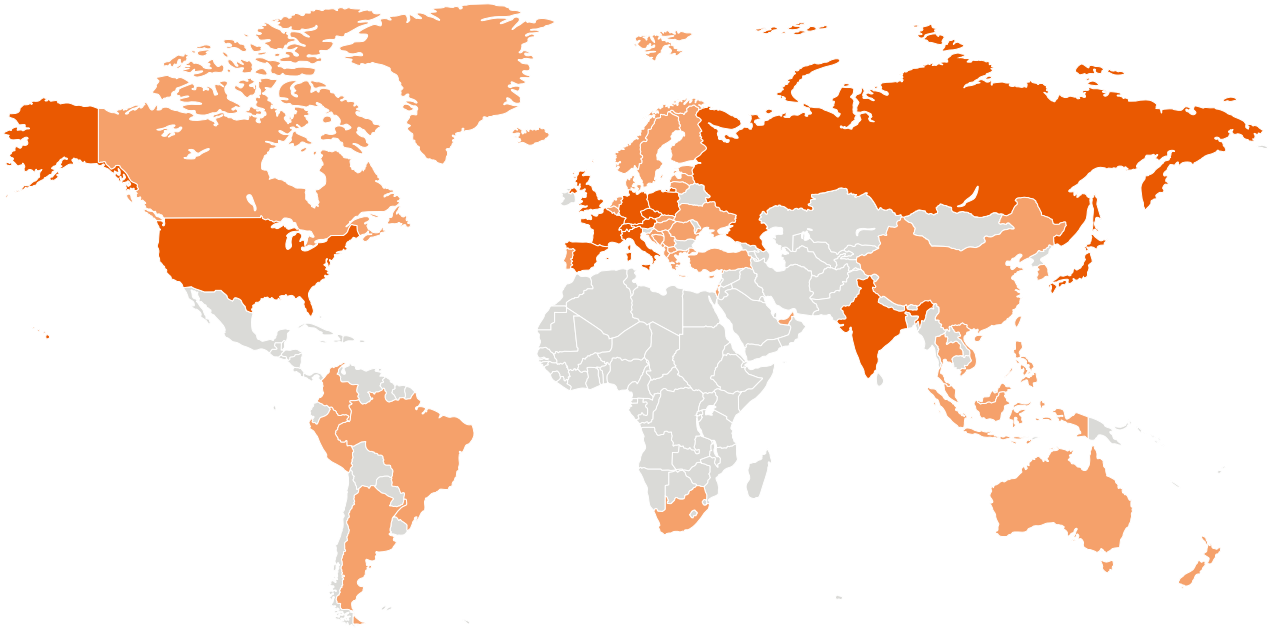

Subject to change H76003 Trafag AG 04/2020

Trafag sensors & controls
Switzerland

Industriestrasse 11
CH-8608 Bubikon

Tel. +41 44 922 32 32
Fax +41 44 922 32 33

www.trafag.com
trafag@trafag.com

trafag sensors controls