MG-AU – 4-digit large-size indicator for indoor use

Multifunction meas. input: Direct voltage, direct current, Pt100(0), thermocouple, rotational speed, counter

- red display of von -1999…9999 digits (optional 6 or 8 digits)
- digit height 57 mm, 100 mm or 200 mm
- protection class IP65
- wall mounting housing
- membrane for pressure equalisation for air ventilation and air vent
- display adjustment via factory setting or directly on the sensor signal
- minimum/maximum value recording
- 9 additional, adjustable supporting points
- display flashing at threshold value exceedance / undercut
- tara function
- brightness sensor
- programming interlock via access code
- 2 switching points (closer)
- optional: fix cable outlet 2m, 5m or 10m
- optional: connection via external keypad
- on request: communication via Bluetooth
- accessories: PC-based configuration kit PM-TOOL with CD and USB-plug



• Multifunction measuring input

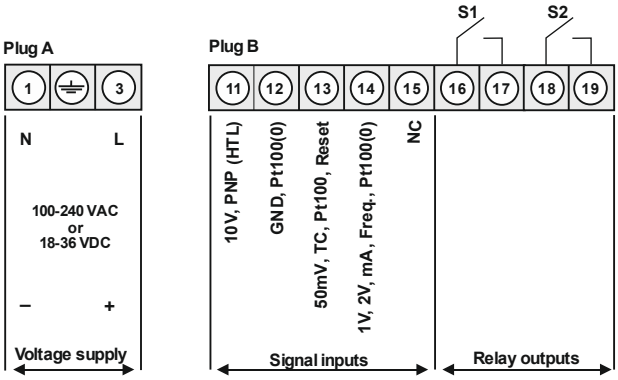

		ORDER NUMBER (without options)
		Built-on enclosure
57 mm	100-240 VAC	**MG-AUR41.000X.S12xO**
57 mm	18-36 VDC	**MG-AUR41.000X.712xO**
100 mm	100-240 VAC	**MG-AUR42.000X.S12xO**
100 mm	18-36 VDC	**MG-AUR42.000X.712xO**
200 mm	100-240 VAC	**MG-AUR45.000X.S12xO**
200 mm	18-36 VDC	**MG-AUR45.000X.712xO**

Options:

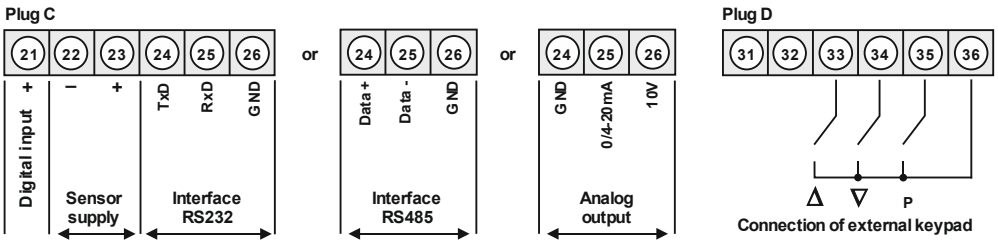

• Parameterisation software

	ORDER NUMBER
PC-based configuration software PM-TOOL, for devices without keypad or for a simple parameterization of standard devices, incl. CD and USB adapter.	**PM-TOOL-USB**

Large indicator

- **Order key options**

M	**G**	**-**	**A**	**U**	**R**	**4**	**1.**	**0**	**0**	**0**	**X.**	**S**	**1**	**2**	**x**	**O**
M	**G**	**-**	**A**	**U**	**R**	**4**	**1.**	**0**	**0**	**0**	**X.**	**7**	**1**	**2**	**x**	**O**

Supply 100-240 VAC / DC ± 10%	
Supply 18-36 VDC galv. isolated	
D	Dimension: maximum 3-digit
E	Connection for external keypad (plug D)
X	Analog output 0/4-20 mA, 0-10 VDC 16 bit*
2	Sensor supply 10 VDC/20 mA, digital input
3	Sensor supply 24 VDC/50 mA, digital input
3	Interface RS232 / Modbus protocol*
4	Interface RS485 / Modbus protocol*
B	Communication via Bluetooth
1	57 mm digit height
2	100 mm digit height
3	200 mm digit height
6	Number of digits: 6 – 57 mm
6	Number of digits: 6 – 100 mm
6	Number of digits: 6 – 200 mm
8	Number of digits: 8 – 57 mm
8	Number of digits: 8 – 100 mm
8	Number of digits: 8 – 200 mm
G	Green LED
B	Blue LED
O	Orange LED
B	Installation housing 57 mm, max. 4-digit
B	Installation housing 100 mm, max. 4-digit

***Option analog output cannot be combined with interface RS232/RS485.**

MG**O** (**O**utdoor): 57 mm for 210,00€ (options on request) / 100 mm for 350,00€ / 200 mm for 650,00€
- only possible for a voltage supply of 100-240 **VAC!**

- **Fixing drawing for installation and built-on housing**

Built-on housing

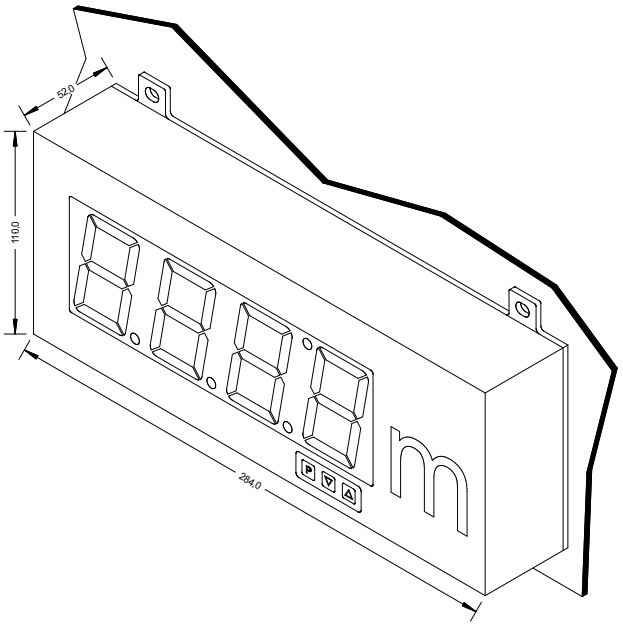

Built-in housing

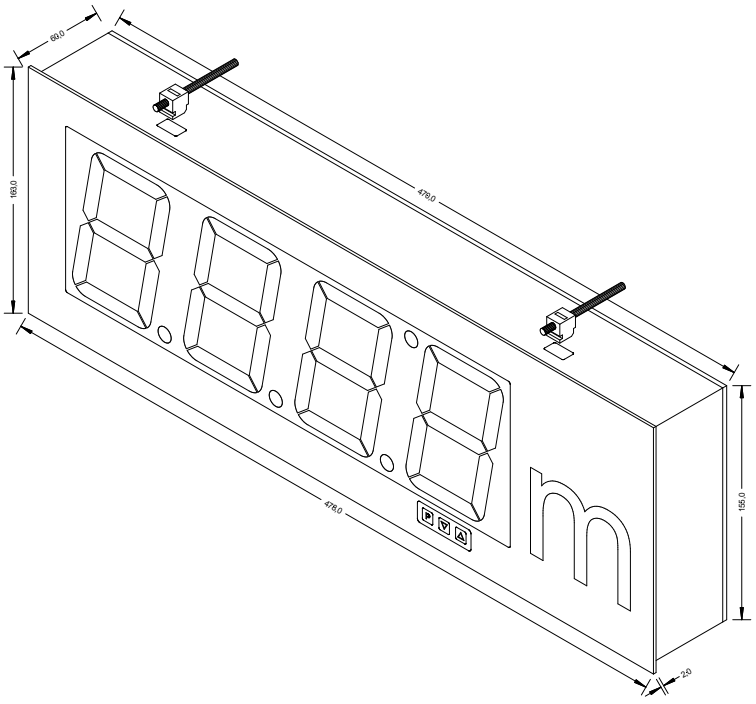

- **Technical data**

Dimensions	Built-on housing	57 mm display: 284 mm x 110 mm x 52 mm (BxHxD) 100 mm display: 470 mm x 155 mm x 58 mm (BxHxD) 200 mm display: 998 mm x 276 mm x 58 mm (BxHxD)
	Installation housing	57 mm display 100 mm display: 478 mm x 155 mm x 60 mm (BxHxD) $474^{-0,5}$ mm x $159^{-0,5}$ mm (BxH) = panel cut-out
Fixing	Built-on housing	via fixing clamp on the rear panel
Protection class	Built-on housing	IP65 complete
Connection	Built-on housing plug (internal)	PG-screwing, rear side of housing Plug A: 3-pole plug-in terminal for voltage supply Plug B: 9-pole plug-in terminal for measuring signal and switching outputs Plug C: 6-pole plug-in terminal for analog output, sensor supply, digital input, interface (optional) Plug D: 6-pole plug-in terminal for external keypad (optional)
Weight	57 mm display (4-digit): approx. 1.3 kg 100 mm display (4-digit): approx. 2.7 kg 200 mm display (4-digit): approx. xx kg	
Display	Display	Power LEDs
	Digit height	57 mm, 100 mm
	Display colour	red, green (orange, blue on request)
	Number of digits	4, optional 6 or 8 digits
	Display range	-1999 to 9999
	Overflow	horizontal bars at the top
	Underflow	horizontal bars at the bottom
	Display time	0.01 to 2.0 seconds
	Application area	Indoor / outdoor

Measuring input

Signal	**Measuring range**	**Measuring span**	**Resolution**
Voltage	0…10 V Ri > 100 kOhm	0-12 V	≥ 14 bit
Voltage	0…2 V Ri > 10 kOhm	0-2.2 V	≥ 14 bit
Voltage	0…1 V Ri > 10 kOhm	0-1.1 V	≥ 14 bit
Voltage	0…50 mV Ri > 10 kOhm	0-75 mV	
Current	4…20 mA Ri = ~125 Ohm	1-22 mA	
Current	0…20 mA Ri = ~125 Ohm	0-22 mA	
Pt100-3-wire	-50…200°C / -58…392°F		0.1°C / 0.1°F
Pt100-3-wire	-200…850°C / -328…1562°F		1°C / 1°F
Pt1000-2-wire	-200…850°C / -328…1562°F		1°C / 1°F
Thermo K	-270…1350°C / -454…2462°F		1°C / 1°F
Thermo S	-50…1750°C / -328…3182°F		1°C / 1°F
Thermo N	-270…1300°C / -454…2372°F		1°C / 1°F
Thermo J	-170…950°C / -274…1742°F		1°C / 1°F
Thermo T	-270…400°C / -454…752°F		1°C / 1°F
Thermo R	-50…1768°C / -58…3214°F		1°C / 1°F
Thermo B	80…1820°C / 176…3308°F		1°C / 1°F
Thermo E	-270…1000°C / -454…1832°F		1°C / 1°F
Thermo L	-200…900°C / -328…1652°F		1°C / 1°F
Frequency	0…10 kHz		0.001 Hz ± 1
NPN	0…3 kHz		0.0001 Hz ± 1
PNP	0…1 kHz		0.0001 Hz
Rotational speed	0…9999 1/min		0.0001 1/min
Counter	0…9999 (prescaler up to 1000)		
Pulse input	TTL low <2 V / High >3 V HTL/PNP Low <6 V / High >8 V NPN Low <0.8 V / High via resistance Namur Low <1.5 mA / High >2.5 mA		

Counter reset	active < 0.8 V	
Digital input	< 2.4 V OFF, 10 V ON, max. 30 VDC, RI~ 5 kOhm	
Output	Sensor supply	24 VDC / 50 mA incl. digital input 10 VDC / 50 mA incl. digital input
	Analog output	0/4-20 mA, 0-10 VDC 16 bit
	Relay	2x normally open contacts 30 VDC / 2 A resistive load
	Interface	RS232 Modbus protocol RS485 Modbus protocol Bluetooth module 4.0
Measuring error	Standard	0.2% of measuring range ± 1 digit
	Pt100 / Pt1000	0.5% of measuring range ± 1 digit
	Thermocouple	0.3% of measuring range ± 1 digit
Accuracy	Reference junction	± 1°C
	Temperature drift	100 ppm/K
	Measuring time	0.01 to 2.0 seconds
	Measuring rate	approx. 1/s with temperature sensor, approx. 100/s with standard signals

	Measuring principle	U/F-conversion
	Resolution	approx. 14 bit at 1 sec measuring time
Power pack	Supply	100-240 VAC 50/60 Hz, DC ±10% 18-36 VDC, galv. isolated
	Power consumption	maximum 50 VA, max. 200mm display
Memory	EEPROM	Data life ≥100 years at 25°C
Ambient	Working temperature	-20...+50°C with a supply of 100-240 VAC, -10...+50°C with a supply of 24 VDC
conditions	Storing temperature	-30...+70°C
	Weathering resistance	rel. humidity ≤75 % on years average without dew
EMV	EN 61326	
CE-sign	conformity according to 2014/30/EU	
Safety requirements	according to low voltage directive 2014/35/EU; EN 61010; EN 60664-1	

- **Order key**

	M	G	-	A	U	R	4	1.	0	0	0	X.	S	1	2	x	O

Basic type M-line

Large-size indicator

Housing type

Built-on housing	A

Display type

Multifunction measuring input	U

Display colour

Red	R
Green (on request)	G
Blue (on request)	B
Orange (on request)	O

Number of digits

4-digit	4
6-digit	6
8-digit	8

Digit height

57 mm	1
100 mm	2
200 mm	3

Interfaces

none	0
RS232 Modbus protocol	3
RS485 Modbus protocol	4
Bluetooth module	B

Dimension

O	without
D	maximum 3 characters

Version

x	Internal version

Switching points

2	2 switching points

Operation

1	Keys at the front
E	Connection for external keypad

Supply voltage

7	18-36 VDC galv. isolated
S	100-240 VAC

Measuring input

X	Direct voltage, direct current, Pt100(0), thermocouple, counter, frequency

Analog output*

0	without
X	0/4-20 mA, 0-10 VDC

Sensor supply

0	none
2	10 VDC / 20 mA
3	24 VDC / 50 mA

The option „Analog output“ cannot be combined with option “Interface”!